T6系列单泵 T6 Series - Single Pumps

产品外观及简介

适用于塑胶机械、压铸机械、冶金机械、炼油机械、压力机械、工程机械及船舶机械等的高压高性能柱销式叶片泵。

其主要特点：

1、采用柱销式叶片的结构，其工作压力更高、噪声更低、寿命更长。

2、适应液压介质的粘度范围大，能在低温下启动和高温下运行。

3、采用双唇结构的叶片，抗污染能力强，转速范围宽。

Shape and introduction

High pressure and high performance dowel pin type vane pumps are widely used for plastic machinery, casting machinery, metallurgy machinery, pressing machinery, refining machinery, construction machinery, marine-Machinery.

The main features are:

1.With dowel pin vane structure, it can work in high pressure, low noise and long lifetime.

2.This vane pump can fit wide viscosity hydraulic medium and be started at low temperature and work at high temperature.

3.As the vane pump adopts bilabial structure vane, it has high oil polution resistance and wide speed scope.

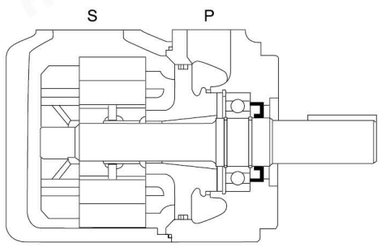

液压符号
Hydraulic signs

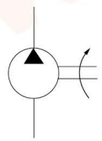

型号说明 Model descriptions:

T6C	-17	-1	R	00	-A	1
系列号 Code of series	排量代号 Flow code	轴伸形式 Shaft type	旋转方向 Direction of rotation	出油口位置 Outlet Positions	设计号 Designing No.	密封等级 Sealing Level
T6C	03、05、06、08、10、12、14、17、20、22、25、28、31	见轴伸尺寸 See of shaft	（从泵的轴端看）(viewed from shaft end of pump) R-顺时针旋转 R-right hand for clockwise L-逆时针旋转 L-left hand for counter clockwise	（从泵的轴端看）(viewed from shaft end of pump) 00-进油口对面 00-Opposite inlet port 01-进油口同侧 01-Inline with inlet 02-从进油口逆时针90° 90° CCW from inlet 03-从进油口顺时针90° 90° CW from inlet	A	1-S1, 丁腈橡胶 NBR Nitrile rubber 5-S5, 氟橡胶 Fluororubber
T6D	14、17、20、24、28、31、35、38、42、45、50、61					
T6E	42、45、50、52、57、62、66、72、85					

T6系列单泵 T6 Series - Single Pumps

技术参数 Technical parameters

系列号 series	排量代号 Flow code (USgpm)	理论排量 Geometric displace-ment mL/r	最高压力 Max. pressure Mpa						最高转速 Max. speed r/min		最低转速 Min speed r/min
			抗磨液压油 Antiwear hydraulic oil		普通液压油和磷酸脂液 General hydraulic oil or phosphate eater fluid		水乙二醇和油包水乳化液 Water glycol fluid or water-oil emulsions		普通液压油和抗磨液压油 General hydraulic oil or antiwear hydraulic oil	水乙二醇、磷酸脂液和油包水乳化液 Water glycol fluid or phosphate eater fluid or water-oil emulsions	
			间歇 Instant	连续 Continuous	间歇 Instant	连续 Continuous	间歇 Instant	连续 Continuous			
T6C	03	10. 8	28	24. 5	21	17. 5	17. 5	14	2800	1800	600
	05	17. 2									
	06	21. 3									
	08	26. 4									
	10	34. 1									
	12	37. 1									
	14	46. 0									
	17	58. 3									
	20	63. 8									
	22	70. 3									
	25	79. 3							2500		
	28	88. 8	21	16		16					
	31	100. 0									
T6D	14	47. 6	24. 5	21	21	17. 5	17. 5	14	2500	1800	600
	17	58. 2									
	20	66. 0									
	24	79. 5									
	28	89. 7									
	31	98. 3									
	35	111. 0									
	38	120. 3									
	42	136. 0							2200		
	45	145. 7									
	50	158. 0	21	16		16					
	61	190. 5	12	8	8	8	8	8			
T6E	42	132. 3	24. 5	21	21	17. 5	17. 5	14	2200	1800	600
	45	142. 4									
	50	158. 5									
	52	164. 8									
	57	179. 8									
	62	196. 7									
	66	213. 3									
	72	227. 1									
	85	269. 0	9	7. 5	7. 5	7. 5	7. 5	7. 5	2000		

安装连接尺寸 Installation Dimensions

T6C
T6D
T6E

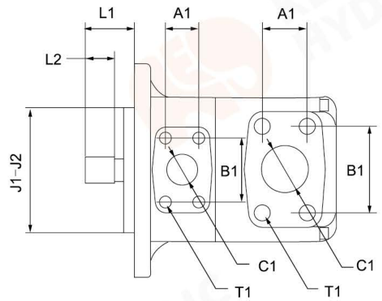

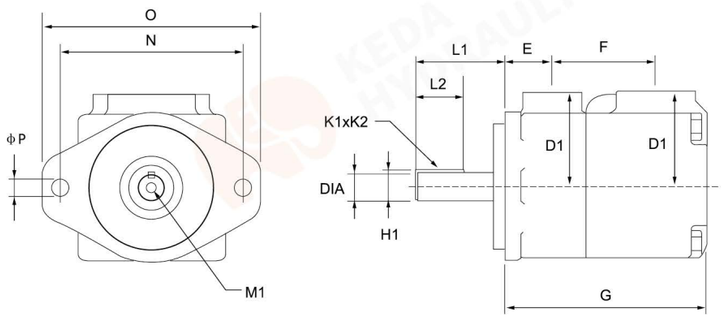

	T6C
E	38.1
F	82.3
G	161.6
J1	101.60
J2	101.55
N	146.1
O	174.5
ϕP	14.3

	T6D	T6E
E	38.1	52.3
F	87.4	110.0
G	184.9	225.3
J1	127.00	127.00
J2	126.95	126.95
N	181.0	181.0
O	212.4	213.0
ϕP	17.5	17.5

型号 Model	轴伸代号 Shaft code	最大扭矩 Max torque (N. m)	L1	L2	DIA	K1xK2	H1	M1
T6C	1	275	71. 4	38. 1	22. 225/22. 200	6.35x6.30	24.95	M8x16
	2	238	58. 2	31. 7	22. 225/22. 200	4.76x4.71	24.53	–
	3	343	40. 7	24. 5	SAE J498b 1级，径节 16/32, 13牙			–
	4	●	45. 5	24. 5	SAE J498b 1级，径节 16/32, 15牙			–
T6D	1	●	83. 6	49. 3	31. 750-31. 700	7.94x7.89	35.27	M10x20
	2	577	73. 2	38. 1	31. 750-31. 700	7.94x7.89	35.27	–
	3	●	55. 2	38. 0	SAE J498b 1级，径节 12/24, 14牙			–
	4	●	77. 7	48. 0	SAE J498b 1级，径节 12/24, 14牙			–
T6E	1	●	90. 9	50. 8	38. 100-38. 050	9.52x9.47	42.36	M10x20
	2	577	61. 9	38. 1	31. 750-31. 700	7.94x7.89	35.27	–
	3	●	55. 2	38. 0	SAE J498b 1级，径节 12/24, 14牙			–
	4	●	62. 2	31. 5	SAE J498b 1级，径节 12/24, 17牙			–

●能在最大流量，最高压力下工作。 ●work at maxlmum flow and pressure.

油口/oil port			法兰 Flange	安装尺寸/Install Dimensions (mm)				
				A1	B1	ϕC1	D1	T1口螺纹 Thread
T6C	P	1″	F08	26. 2	52. 4	25. 4	76. 2	3/8″-16UNCx19. 0
	S	1-1/2″	F12	35. 8	70. 0	38. 1	76. 2	1/2″-13UNCx22. 4
T6D	P	1-1/4″	F10	30. 2	58. 7	31. 8	82. 6	7/16″-14UNCx22. 3
	S	2″	F16	42. 9	77. 8	50. 8	82. 6	1/2″-13UNCx23. 9
T6E	P	1-1/2″	F12	35. 7	69. 8	37. 1	98. 6	1/2″-13UNCx23. 4
	S	3″	F24	61. 9	103. 4	75. 0	98. 6	5/8″-11UNCx24. 0

T6系列双联泵 T6 Series - Double Pumps

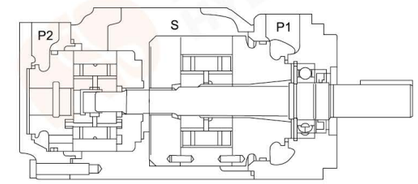

液压符号
Hydraulic signs

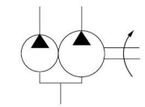

型号说明 Model descriptions:

T6CC	-25	-17	-1	R	02	-C	1	10
系列号 Series	轴端泵排量代号 Flow-shaft and Pump	盖端泵排量代号 Flow-cover end Pump	轴伸形式 Shaft type	旋转方向 Rotation	油口位置 port Positions	设计号 Design number	密封等级 Sealing Level	油口尺寸 Port dimensions
T6CC	03、05、06、08、10、12、14、17、20、22、25、28、31	03、05、06、08、10、12、14、17、20、22、25、28、31	见轴伸尺寸 See of shaft	（从泵的轴端看）(viewed from shaft end of pump) R-顺时针旋转 right hand for clockwise L-逆时针旋转 left hand for counter-clockwise	见下图 see picturs below	C	1-S1, 丁腈橡胶 NBR Nitrile rubber 5-S5, 氟橡胶 Fluororubber	00、01、10、11，见安装连接尺寸 See installation dimensions
T6DC	14、17、20、24、28、31、35、38、42、45、50、61	03、05、06、08、10、12、14、17、20、22、25、28、31						
T6EC	42、45、50、52、57、62、66、72、85	03、05、06、08、10、12、14、17、20、22、25、28、31						无此选项 no options
T6ED	42、45、50、52、57、62、66、72、85	14、17、20、24、28、31、35、38、42、45、50、61						

与相同规格的单泵性能参数一致，详见T6单泵的性能参数。
Specification is as the same as similar single purmp, please refer to Page T6 single pump specification.

油口位置（从泵的轴端看） Port positions(Viewes from shaft end of pump)

T6CC、T6DC、T6EC

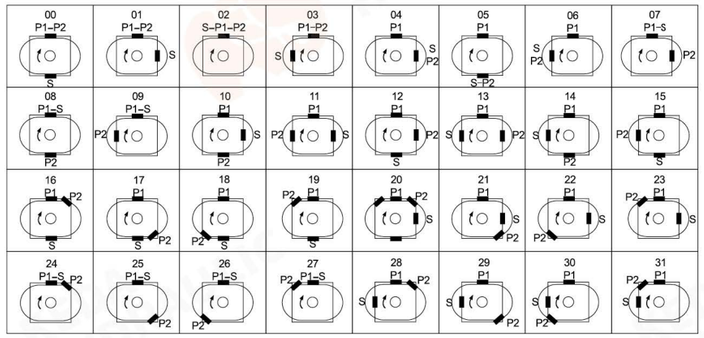

T6ED

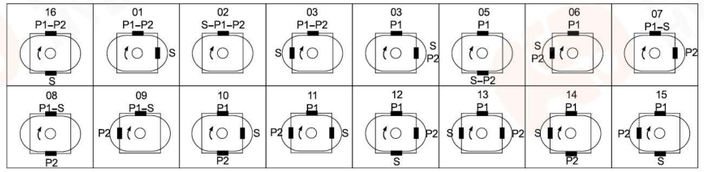

安装连接尺寸 Installation Dimensions

T6CC
T6DC
T6EC
T6ED

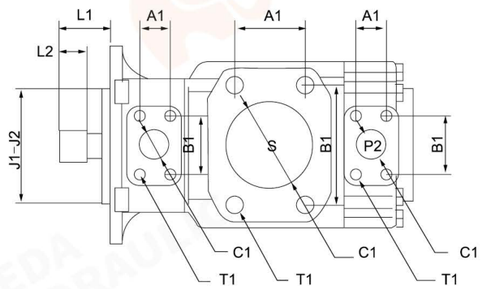

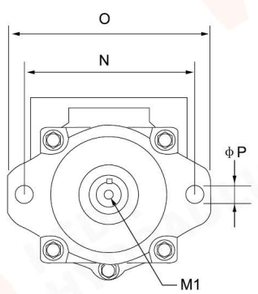

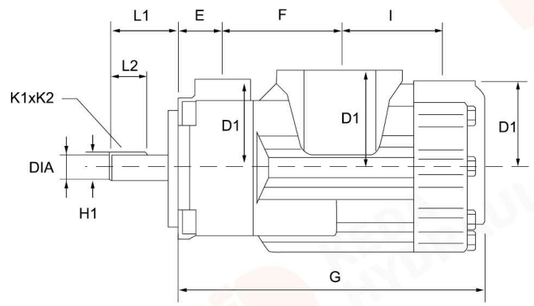

	T6CC
E	38.1
F	101.6
G	265.6
1	88.2
J1	101.60
J2	101.55
N	148.0
O	174.5
ϕP	14.3

	T6DC
E	38.1
F	114.3
G	286.0
1	109.5
J1	127.00
J2	126.95
N	181.0
O	215.4
ϕP	17.5

	T6EC
E	52.3
F	118.5
G	331.6
1	136.7
J1	127.00
J2	126.95
N	161.0
O	213.0
ϕP	17.5

	T6ED
E	52.3
F	133.5
G	361.0
1	148.0
J1	127.00
J2	126.95
N	181.0
O	213.0
ϕP	17.5

油口/oil port			法兰 Flange	尺寸/Dimensions (mm)				
				A1	B1	ϕC1	D1	T1 口螺纹 Thread UNC
T6CC	P1	1"	F08	26.2	52.4	25.4	76. 2	3/8"-16UNCx19.0
	P2	01-11:3/4" 00-10:1"	F06 F08	22.2 26.2	47.7 52.4	19.0 25.4	76. 2 74. 7	3/8"-16UNCx19.0
	S	10-11:2-1/2" 00-01:3"	F20 F24	50.8 61.9	88.9 106.4	63.5 76.2	84. 1	1/2"-13UNCx23.9 5/8"-11UNCx28.4
T6DC	P1	1-1/4"	F10	30.2	58.7	31.8	82. 6	7/16"-14UNCx22.3
	P2	1"	F08	26.2	52.4	25.0	74. 7	3/8"-16UNCx19.0
	S	3"	F24	62.0	106.4	76.0	88. 9	5/8"-11UNCx28.4
T6EC	P1	1-1/2"	F12	35.7	69.8	37.1	98. 4	1/2"-13UNCx23.4
	P2	1"	F08	26.2	52.4	25.0	74. 7	3/8"-16UNCx19.0
	S	3-1/2"	F28	69.9	120.6	88.9	102. 4	5/8"-11UNCx28.4
T6ED	P1	1-1/2"	F12	35.7	69.8	37.1	98. 4	1/2"-13UNCx23.4
	P2	1-1/4"	F10	30.2	58.7	29.5	101. 6	7/16"-14UNCx24.0
	S	4"	F32	77.8	130.2	101.6	102. 4	5/8"-11UNCx30.0

安装连接尺寸 Installation Dimensions

T6CC、T6DC、T6EC、T6ED

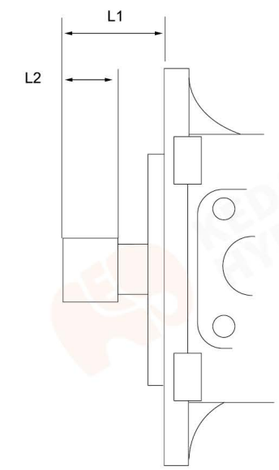

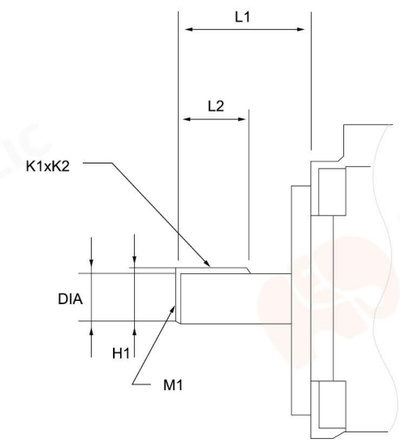

型号 Model	轴伸代号 Shaft code	最大扭矩 Max torque (N. m)	L1	L2	DIA	K1xK2	H1	M1
T6CC	1	238	58.2	31.7	22. 225/22. 200	4.76x4.71	24.53	–
	2	357	71.4	38.1	25.4/25.370	6.35x6.30	28.22	M8x16
	3	545	45.5	25.5	SAE J498b 1级，径节 16/32, 15牙			–
	4	343	40.7	24.5	SAE J498b 1级，径节 16/32, 13牙			–
T6DC	1	721	83.6	49.3	31. 750-31. 700	7.94x7.89	35.27	M10x20
	2	577	73.2	38.1	31. 750-31. 700	7.94x7.89	35.27	–
	3	●	55.7	38.0	SAE J498b 1级，径节 12/24, 14牙			–
	4	●	77.7	48.0	SAE J498b 1级，径节 12/24, 14牙			–
T6EC、T6ED	1	●	90.9	50.8	38. 100-38. 050	9.52x9.47	42.36	M10x20
	2	577	61.9	38.1	31. 750-31. 700	7.94x7.89	35.27	–
	3	●	55.7	38.0	SAE J498b 1级，径节 12/24, 14牙			–
	4	●	62.2	31.5	SAE J498b 1级，径节 12/24, 17牙			–

●能在最大流量，最高压力下工作。 ●work at maxlmum flow and pressure.

T6系列三联泵 T6 Series - Treble Pumps

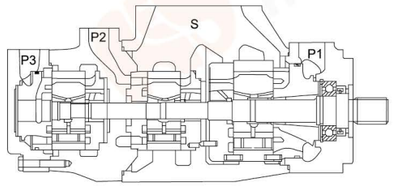

液压符号
Hydraulic sign

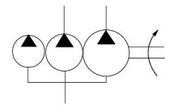

型号说明 Model descriptions:

T6DCC	-42	-17	-10	-1	R	02	-A	1	01
系列号 Series	轴端泵排量代号 Flow-shaft and Pump	中间泵排量代号 Flow-middle Pump	盖端泵排量代号 Flow-cover end Pump	轴伸形式 Shaft type	旋转方向 Rotation	油口位置 port Positions	设计号 Design unmber	密封等级 Sealing Level	油口尺寸 Port dimensions
T6DCC	14、17、20、24、28、31、35、38、42、45、50、61	03、05、06、08、10、12、14、17、20、22、25、28、31	03、05、06、08、10、12、14、17、20、22、25、28、31	见轴伸尺寸 See of shaft	（从泵的轴端看）(viewed from shaft end of pump) R-顺时针旋转 right hand for clockwise L-逆时针旋转 left hand for counter-clockwise	见下图 see picturs below	A	1-S1, 丁腈橡胶 NBR Nitrile rubber 5-S5, 氟橡胶 Fluororubber	00、01，见安装连接尺寸 See installation dimensions
T6DDCS	14、17、20、24、28、31、35、38、42、45、50、61	14、17、20、24、28、31、35、38、42 45、50、61	03、05、06、08、10、12、14、17、20、22、25、28、31						
T6EDC T6EDCS	42、45、50、52、57、62、66、72、85	14、17、20、24、28、31、35、38、42 45、50、61	03、05、06、08、10、12、14、17、20、22、25、28、31						

油口位置（从泵的轴端看） Port positions(Viewes from shaft end of pump)

T6DCC、T6DDCS、T6EDC、T6EDCS

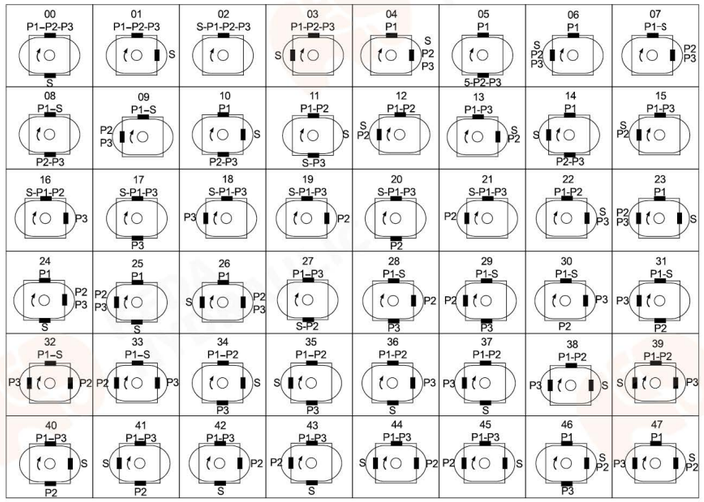

T6系列三联泵 T6 Series - Treble Pumps

油口位置（从泵的轴端看） Port positions(Viewes from shaft end of pump)

T6DCC、T6DDCS、T6EDC、T6EDCS

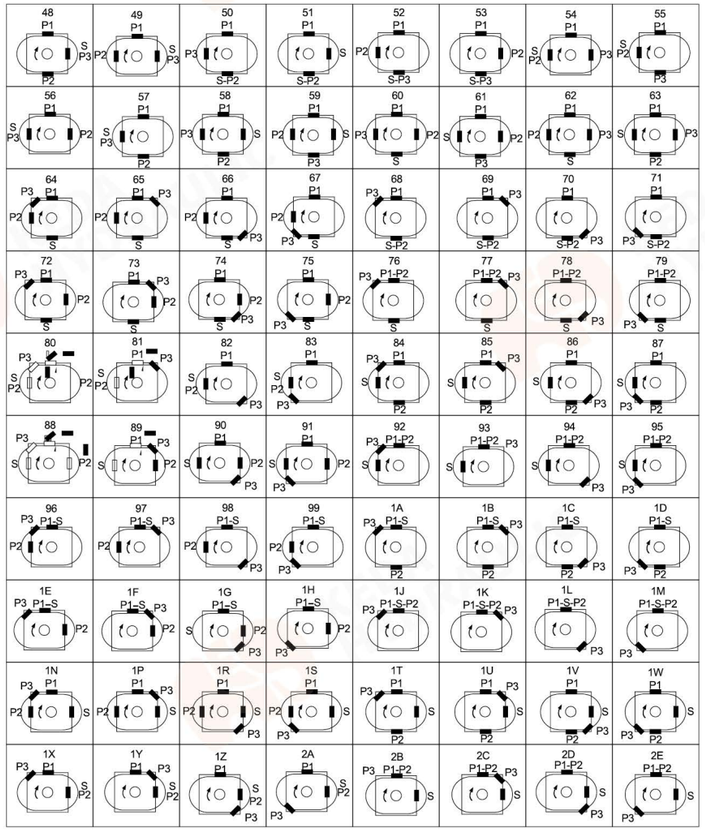

安装连接尺寸 Installation Dimensions

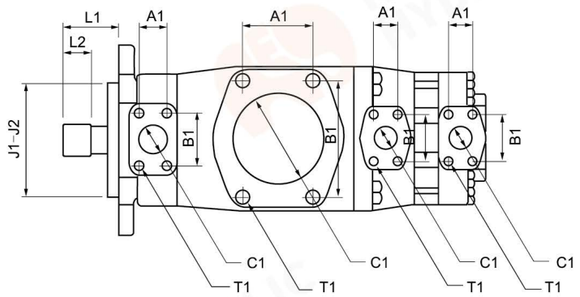

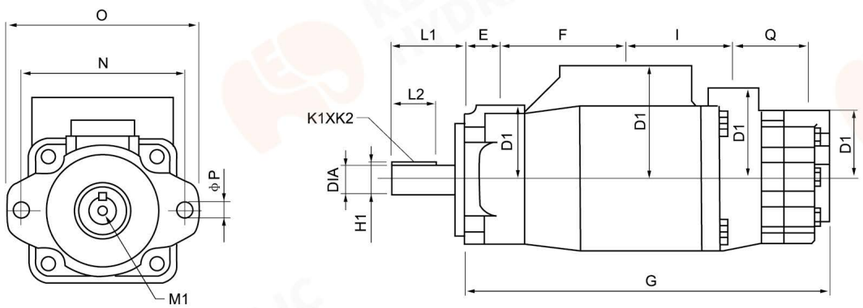

T6DCC	
E	38.1
F	138.0
G	404.0
1	119.3
J1	127.00
J2	126.95
N	181.0
O	212.4
ΦP	17.5
Q	84.4

轴伸 Shaft code		最大扭矩 Max torque (N. m)	尺寸/Dimensions (mm)					
		T6DCC	L1	L2	DIA	K1xK2	H1	M1
1	平键:No SAE(Φ31)	721	83.6	49. 3	31. 750-31. 700	6. 35x6. 30	34. 6	
2	平键:SAE CC(Φ38)	1108	89.7	50. 8	38. 100-38. 075	9. 52x9. 47	42. 4	
3	花键:SAE C	●	55.2	38. 0	SAE J498b 1级，径节 12/24, 14牙			
4	花键:SAE C	●	61.0	31. 5	SAE J498b 1级，径节 12/24, 17牙			
6	花键:No SAE	●	76.0	48. 0	SAE J498b 1级，径节 12/24, 14牙			

油口/oil port			尺寸/Dimensions (mm)				
			A1	B1	ΦC1	D1	T1 口螺纹 Thread UNC
T6DCC	P1	1-1/4"	30. 2	58. 7	31. 8	82. 6	7/16"-14UNCx22.3
	P2	1"	26. 2	52. 4	25. 0	101. 6	3/8"-16UNCx19.0
	P3	01:3/4″ 00:1″	22. 2 26. 2	47. 7 52. 4	19. 2 25. 4	74. 7	3/8"-16UNCx19.0
	S	4″	77. 8	130. 2	101. 6	127. 0	5/8"-11UNCx30.0

安装连接尺寸 Installation Dimensions

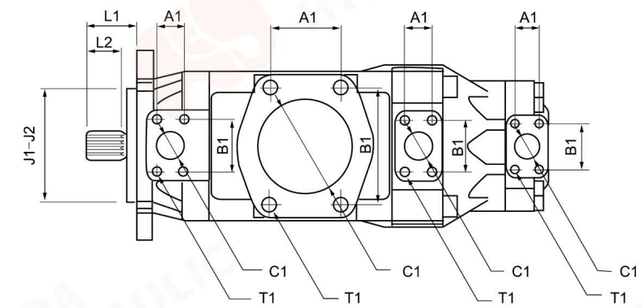

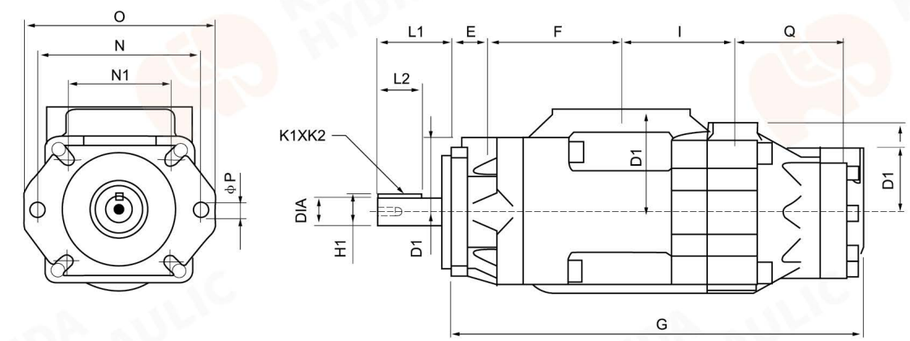

T6DDCS	
E	38. 1
F	148. 5
G	455. 0
1	125. 0
J1	127. 00
J2	128. 95
N	181. 0
N1	114. 5
O	213. 0
ΦP	17. 5
Q	120

轴伸 Shaft code		最大扭矩 Max torque (N. m)	尺寸/Dimensions (mm)					
		T6DDCS	L1	L2	DIA	K1xK2	H1	M1
1	平键:SAE-C	686	84. 0	49. 3	31. 750-31. 700	7. 94x7. 89	35. 27	M10x20
2	平键:SAE-CC	1148	91. 0	50. 8	38. 100-38. 075	9. 52x9. 47	42. 36	M10x20
3	花键:非SAE	883	84. 0	60. 0	34. 900-34. 850	7. 94x7. 89	38. 42	M10x20
4	花键:SAE-C	971	56. 0	38. 0	SAE J498b 1级，径节 12/24, 14牙			
6	花键:SAE-CC	●	46. 0	31. 5	SAE J498b 1级，径节 12/24, 17牙			

油口/oil port			尺寸/Dimensions (mm)				
			A1	B1	ΦC1	D1	T1 口螺纹 Thread UNC
T6DDCS	P1	1-1/4"	30. 2	58. 7	31. 8	82. 6	7/16"-14UNCx22.3
	P2	1-1/4"	30. 2	58. 7	31. 8	101. 6	3/8"-14UNCx24.0
	P3	01:3/4″ 00:1″	22. 2 26. 2	47. 7 52. 4	19. 0 25. 4	74. 7	3/8"-16UNCx19.0
	S	4″	77. 8	130. 2	101. 6	115. 0	5/8"-11UNCx30.0

安装连接尺寸 Installation Dimensions

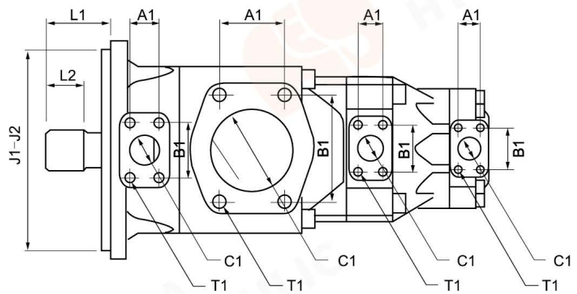

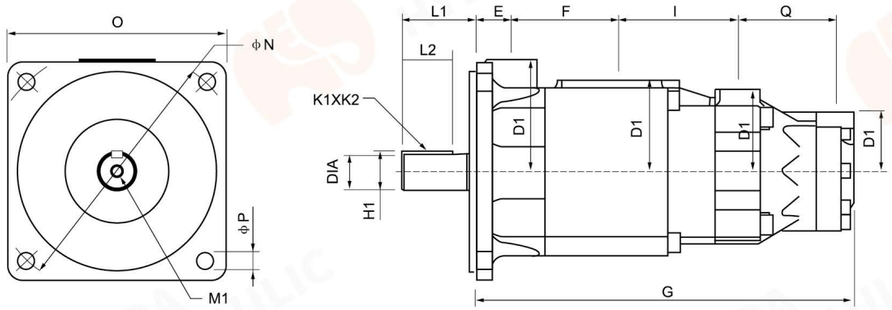

T6EDC	
E	42. 9
F	133. 3
G	468. 0
1	148. 4
J1 J2	250h8
N	315. 0
O	273. 0
ϕP	22. 0
Q	120. 0

T6EDCS	
E	42. 9
F	133.3
G	468.0
1	148.4
J1	165.05
J2	165.10
N	315.0
O	273.0
ϕP	22.0
Q	120.0

轴伸 Shaft code		最大扭矩 Max torque (N. m)		尺寸/Dimensions (mm)					
		T6EDC	T6EDCS	L1	L2	DLA	K1xK2	H1	M1
1	平键:No SAE (ϕ31)	●	●	92.0	63.0	45h7	45h7	48. 5	M12x24. 0
2	平键:SAE CC (ϕ38)		●	100.0	63.5	44.450—44. 400	11. 11x11. 06	49. 3	1/2″UNCx24. 0
3	花键:SAE C		●	75.0	75.0	SAE J498b 1级，径节 12/24, 14牙			

油口/oil port			尺寸/Dimensions (mm)				
			A1	B1	ϕC1	D1	T1 口螺纹 Thread UNC
T6EDS T6EDCS	P1	1-1/2"	35. 7	69. 8	37. 1	139. 7	1/2"-13UNCx30. 0
	P2	1/4"	30. 2	58. 7	31. 8	101. 6	7/16"-14UNCx24. 0
	P3	01:3/4″ 00:1″	22. 2 26. 2	47. 7 52. 4	19. 0 25. 4	74. 7	3/8"-16UNCx19.0
	S	4″	77. 8	130. 2	101. 8	115. 0	5/8"-11UNCx30.0

T6系列泵芯 T6 Series - cartridge

型号说明 Model Descriptions:

前泵芯	T6DC	-45	R	1
泵芯名称 Cartridge name	系列号 Series	排量代号 Flow code	旋转方向 Rototion	密封等级 Sealing Level
单泵芯/Cartridge kit of single pump 前泵芯（双联泵或三联泵轴端泵芯） Cartidge kit of double pump treble pump shaft end 中泵芯（三联泵中间轴泵芯） Medium cartridge kit of treble pump 后泵芯（双联泵或三联泵盖端泵芯） Cartridge Kit of double pump treble pump cover end	T6C、T6CC、T6DC、T6EC、T6DCC、T6DDCS、T6EDC(S)	03、05、06、08、10、12、14、17、20、22、25、28、31	（从泵的轴端看） (viewed from shaft end of pump) R-顺时针旋转 right hand for clockwise L-逆时针旋转left hand for counterclockwise	1-S1, 丁腈橡胶 NBR Nitrile rubber 5-S5, 氟橡胶 Fluororubber
	T6D、T6DC、T6ED、T6DCC、T6DDCS、T6EDC	14、17、20、24、28、31、35、38、42、45、50、61		
	T6E、T6EC、T6ED、T6EDC(S)	42、45、50、52、57、62、66、72、85		

与相应系列、规格的单泵性能参数一致，详见T6单泵的性能参数。
The data of relevant series, model are unanimous, please refer to Page T6 single pump specification.

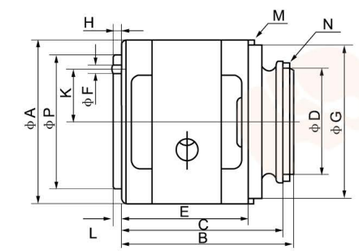

泵芯名称 Cartridge name	滑动轴承内径 Sliding bearing diameter	ϕA	B	C	ϕD	E	ϕF	ϕG	H	K	M(橡胶平垫圈 Rubber washer)	N(橡胶平垫圈 Rubber washer)	ϕP	L
单泵芯T6C	ϕ15. 9	95. 25	99. 4	93. 9	61. 9	72. 1	4. 8	89. 1	4. 8	43. 7	88. 5x3. 53	60x3. 53	77. 7	5. 5
前泵芯T6CC	无滑动轴承 No sliding bearing													
后泵芯T6CC、T6DCC、T6DDCS、T6EDC(S)	ϕ19. 05													
后泵芯T6DC、T6EC	ϕ22. 225													
中泵芯T6DCC	无滑动轴承 No sliding bearing	95. 25	83. 4	77. 3	52. 6	\	4. 8	\	4. 8	43. 7	89x2. 4	52x2. 4	77. 7	5. 5
单泵芯T6D、前泵芯T6DCC	ϕ22. 225	123. 0	132. 4	125. 8	71. 9	102. 2	6. 4	108. 1	8. 0	41. 2	107. 5x3. 53	69. 5x3. 53	无此台阶 No step	
前泵芯T6DC、T6DDCS	无滑动轴承 No sliding bearing													
后泵芯T6ED、中泵芯T6EDC(S)	ϕ28. 6													
中泵芯T6DDCS	ϕ22. 225													
单泵芯T6E	ϕ28. 6	143. 08	150. 3	142. 5	88. 0	113. 0	8. 0	137. 0	8. 0	49. 2	136. 1x3. 53	85. 3x3. 53		
前泵芯T6EC、T6ED、T6EDC(S)	无滑动轴承 No sliding bearing													

泵芯名称 Cartridge name	转子内花键齿廓参数 Inside spline tooth outline parameter of rotor				
	齿数 No. of teeth	径节 Pitch	压力角 Standard angle	大径 Major diameter	小径 Minor diameter
前泵芯T6CC、中泵芯T6DCC	32	40/80	45°	21. 41	19. 9
单泵芯T6C、后泵芯T6CC、T6DC、T6EC、T6DCC、T6DDCS、T6EDC(S)	28	40/80	45°	18. 87	17. 4
单泵芯T6D、前泵芯T6DC、T6DCC T6DDCS、中泵芯T6EDC(S)、后泵芯T6ED	25	24/48	45°	28. 19	25. 8
中泵芯T6DDCS	20	24/48	45°	22. 89	20. 5
单泵芯T6E、前泵芯T6EC、T6ED、T6EDC(S)	34	24/48	45°	37. 72	35. 4

V系列单泵 V series single pumps

产品外观及简介

本系列是工业应用而开发的高性能子母叶片泵。适用于注塑机械、橡胶机械、压铸机械、机床等各种液压系统中。

其主要特点：

1、子母叶片的结构设计，减少了叶片对定子的冲击，在较高的工作压力和高转速下，性能更稳定，寿命更长。

2、子母叶片结构本身具有低噪音的特性。12叶片的设计、流量脉动很小，噪音更低。

3、多排量的选择，以及泵芯的插装式结构、使用户使用更灵活，维修更方便。

Shape and introduction

These series of composition vane pumps in high performance are developed for industrial application. They can be applied properly in the hydraulic system of plastic injection machinery, rubber machinery, casting machinery, machine tool industry, etc.

The main features are:

1.The designing structure of composition vanes reduces its impact on the stator, so the pumps will have further stability and longer lifetime while working with high pressure and high speed.

2.The designing structure of composition vanes itself reduces the noise. The design of 12 vanes makes smaller flow pulsation and lower noise.

3.Multi-displacement option and the cartridge structure of pump core make flexible application and easy maintenance.

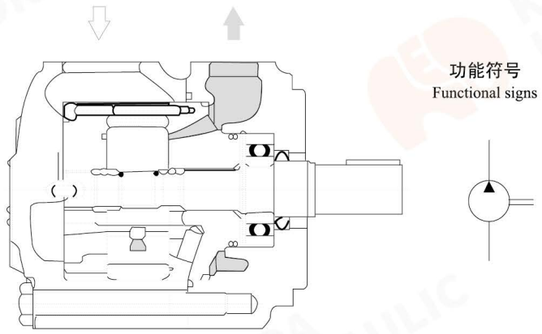

型号说明 *Model descriptions:*

(F3-)	**V	**	A	(F)	-*	*	22	*
前注 Front marks	系列号 Code of series	▲排量代号 ▲Displacement codes	油口连接 Pump port connection	安装型式 Mounting type	轴伸形式 Shaft extension	出油口位置 Outlet position	设计号 Designing No.	旋转方向 Direction of rotation
无标记： 石油系油 乳化液 水一乙 二醇 No mark: water-in oil emulsion of petroleum series F3： 磷酸酯液 F3: Sul phosuccinic ester fatty of acid	20V	2,3,4,5,6,7,8,9,10,11,12,14	A-SAE 4螺栓法兰 4 Bolted flange	无标记- 法兰安装型 No mark-flange mounting F- 脚座安装型 F-foot mounting	1-带键直轴 1-straight shaft with key 151-花键轴 151-spline shaft 1-带键直轴 1-straight shaft with key 86-重型带键直轴 86-heavy-duty straight shaft with key 11-花键轴 11-spline shaft	（从泵的盖端看） (viewed from the cover end of the pump) A-进油口对侧 A: the opposite of inlet B-从进油口逆时针90° B:counterclockwise 90° of pump port C-进油口同侧 C:the same side of pump inlet port D-从进油口顺时针90° D:clockwise 90° of pump inlet port	22	（从泵的轴端看） (viewed from the shaft end of the pump) L-逆时针旋转 L-counterclockwise rotation R-顺时针旋转 R-clockwise rotation
	25V	10,12,14,15,17,19,21						
	35V	21,25,30,32,35,38,45						
	45V	42,45,50,57,60,66,75						

▲在1200r/min和0.69MPa（100psi）下的额定排量USgpm

▲The rated displacement (USgpm) is under the conditions of 1200r/min and 0.69Mpa(100psi).

工作参数 Operating parameters

型号 Models	排量代号 Displacement code	几何排量 Geometric displacement（mL/r）	使用抗磨液压油或磷酸酯液 Anti-wear hydraulic oil or phospholipid		使用水乙二醇液 Water glycol fluid		使用油包水乳化液 Water-in-oil emulsion		最低转速 Mini speed（r/min）
			最高压力 Max pressure（Mpa）	最高转速 Max speed（r/min）	最高压力 Max pressure（Mpa）	最高转速 Max speed（r/min）	最高压力 Max pressure（Mpa）	最高转速 Max speed（r/min）	
20V	2	7.5	13.8	1800	13.8	1500	6.9	1200	600
	3	10							
	4	13							
	5	17	20.7		15.9				
	6	19							
	7	23							
	8	27							
	9	30							
	10	32.5							
	11	36							
	12	40	15.9						
	14	45	13.8		13.8				
25V	10	32.5	17.2	1800	15.9	1500	6.9	1200	600
	12	40							
	14	43							
	15	45							
	17	55							
	19	59							
	21	67							
35V	21	67	17.2	1800	15.9	1500	6.9	1200	600
	25	81							
	30	97							
	32	100							
	35	112							
	38	121							
	45	142							
45V	42	138	17.2	1800	15.9	1500	6.9	1200	600
	45	142							
	50	162							
	57	183							
	60	193							
	66	212							
	75	237	13.8		13.8				

安装连接尺寸 Installation sizes

20V

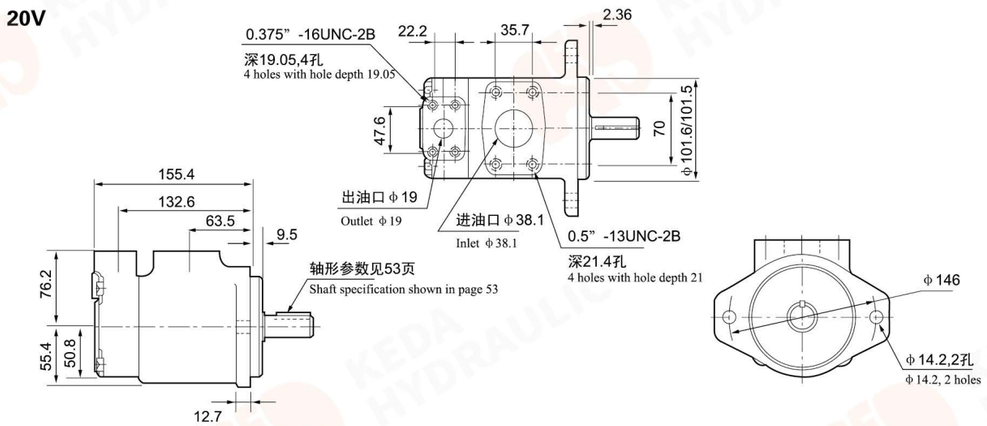

25V,35V,45V

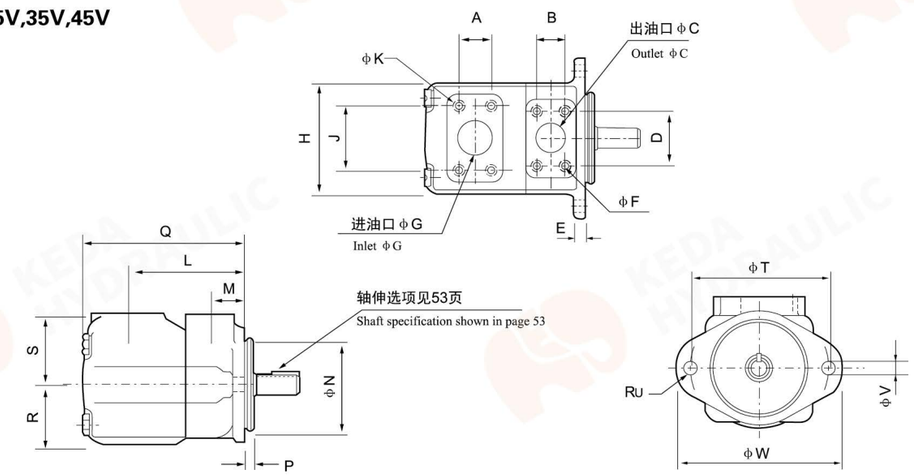

型号 Models	A	B	C	D	E	G	H	J	L	M	N	P	Q	R
25V	35.7	26.2	25.4	52.4	12.7	38.1	118	69.9	121	38.1	101.6/101.5	9.53	162.1	63.5
35V	42.9	30.2	31.8	58.7	16	50.8	140	77.8	125.5	38.1	127.0/126.9	9.53	185	69.9
45V	61.9	35.7	38.1	69.9	16	76.2	159	106.4	153	43	127.0/126.9	12.7	216	82.6

型号 Models	S	T	U	V	W	F x 全部螺纹深，4孔 F× all depth of screw, 4 holes	K x 全部螺纹深，4孔 K× all depth of screw, 4 holes
25V	76.2	146	14	14.2	175	3/8-16UNC-2B x 19.1深 3/8-16UNC-2B x 19.1depth	1/2-13UNC-2B x 23.8深 1/2-13UNC-2B x 23.8 depth
35V	82.6	181	16	17.5	213	7/16-14UNC-2B x 22.3深 7/16-14UNC-2B x 22.3 depth	1/2-13UNC-2B x 22.3深 1/2-13UNC-2B x 22.3 depth
45V	93.7	181	16	17.5	213	1/2-13UNC-2B x 23.8深 1/2-13UNC-2B x 23.8 depth	5/8-11UNC-2B x 30深 5/8-11UNC-2B x 30 depth

V系列双联泵 V Series double pumps

产品外观及简介

本系列是工业应用而开发的高性能子母叶片泵。适用于注塑机械、橡胶机械、压铸机械、机床等各种液压系统中。

其主要特点：

1、子母叶片的结构设计，减少了叶片对定子的冲击，在较高的工作压力和高转速下，性能更稳定，寿命更长。

2、子母叶片结构本身具有低噪音的特性。12叶片的设计、流量脉动很小，噪音更低。

3、多排量的选择，以及泵芯的插装式结构、使用户使用更灵活，维修更方便。

Shape and introduction

These series of composition vane pumps in high performance are developed for industrial application. They can be applied properly in the hydraulic system of plastic injection machinery, rubber machinery, casting machinery, machine tool industry, etc.

The main features are:

1.The designing structure of composition vanes reduces its impact on the stator, so the pumps will have further stability and longer lifetime while working with high pressure and high speed.

2.The designing structure of composition vanes itself reduces the noise. The design of 12 vanes makes smaller flow pulsation and lower noise.

3.Multi-displacement option and the cartridge structure of pump core make flexible application and easy maintenance.

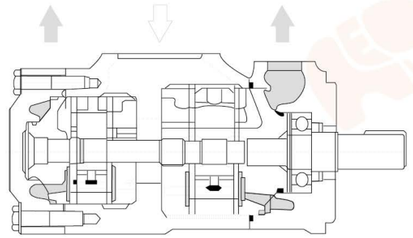

功能符号
Functional signs

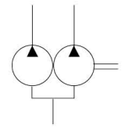

型号说明 *Model descriptions:*

(F3-)	****V	**	A	**	(F)	-**	*	22	*
前注 Front marks	系列号 Code of series	▲排量代号轴端泵 Displacement code shaft end pump	油口连接 Pump port connection	▲排量代号盖端泵 Displacement code cover end pump	安装型式 Mounting type	轴伸形式 Shaft extension	油口位置 Pump position	设计号 Designing No.	旋转方向 Direction of rotation
无标记：石油系油乳化液水一乙二醇 No mark: water-in oil emulsion of petroleum series F3:磷酸酯液 F3: Sul phosuccinic ester fatty of acid	2520V	10,12,14,15,17,19,21	A-SAE 4-螺栓法兰 4 Bolted flange	2,3,4,5,6,7,8,9,10,11,12,14	无标记-法兰安装型 No mark-flange mounting F-脚座安装型 F-foot mounting	1-带键直轴 1-straight shaft with key 86-重型带键直轴 86-heavy-duty straight shaft with key 11-花键轴 11-spline shaft	见下表 See as the following table	22	（从泵的轴端看） (viewed from the shaft end of the pump) L-逆时针旋转 L-counterclockwise rotation R-顺时针旋转 R-clockwise rotation
	3520V	21,25,30,32,35,38,45		2,3,4,5,6,7,8,9,10,11,12,14					
	3525V	21,25,30,32,35,38,45		10,12,14,15,17,19,21					
	4520V	42,45,50,57,60,66,75		2,3,4,5,6,7,8,9,10,11,12,14					
	4525V	42,45,50,57,60,66,75		10,12,14,15,17,19,21					
	4535V	42,45,50,57,60,66,75		21,25,30,32,35,38,45					

▲在1200r/min和0.69MPa（100psi）下的额定排量USgpm

▲The rated displacement (USgpm) is under the conditions of 1200r/min and 0.69Mpa(100psi).

油口位置表（从泵的盖端看） Pump oil port position (viewed from cover end pump)

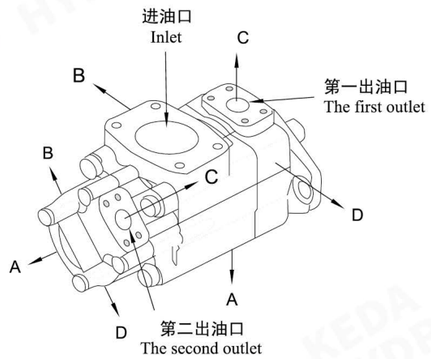

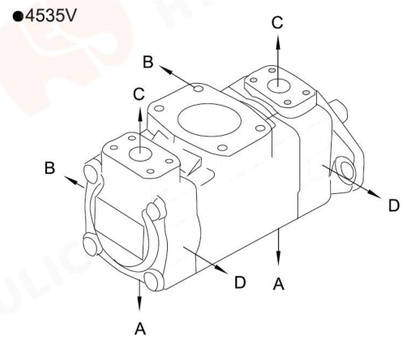

油口位置 Pump position		所有系列（除4535V外） All series (except for 4535 V)	4535V
第一出油口在进油口对侧 The first outlet is the opposition side of inlet.	AA	第二出油口在进油口逆时针转135° The second outlet is to counterclockwise rotation of 135° from inlet	第二出油口在进油口对侧 The second outlet is the opposition side of inlet.
	AB	第二出油口在进油口逆时针转45° The second outlet is to counterclockwise rotation of 45° from inlet	第二出油口在进油口逆时针转90° The second outlet is to counterclockwise rotation of 90° from inlet
	AC	第二出油口在进油口顺时针转45° The second outlet is to clockwise rotation of 45° from inlet	第二出油口在进油口同侧 The second outlet is the same side of inlet.
	AD	第二出油口在进油口顺时针转135° The second outlet is to clockwise rotation of 135° from inlet	第二出油口在进油口顺时针转90° The second outlet is to clockwise rotation of 90° from inlet
第一出油口从进油口逆时针转90°C The first outlet is to counterclockwise rotation of 90° from inlet	BA	第二出油口在进油口逆时针转135° The second outlet is to counterclockwise rotation of 135° from inlet	第二出油口在进油口对侧 The second outlet is the opposition side of inlet.
	BB	第二出油口在进油口逆时针转45° The second outlet is to counterclockwise rotation of 45° from inlet	第二出油口在进油口逆时针转90° The second outlet is to counterclockwise rotation of 90° from inlet
	BC	第二出油口在进油口顺时针转45° The second outlet is to clockwise rotation of 45° from inlet	第二出油口在进油口同侧 The second outlet is the same side of inlet.
	BD	第二出油口在进油口顺时针转135° The second outlet is to clockwise rotation of 135° from inlet	第二出油口在进油口顺时针转90° The second outlet is to clockwise rotation of 90° from inlet
第一出油口在进油口同侧 The first outlet is the same side of inlet.	CA	第二出油口在进油口逆时针转135° The second outlet is to counterclockwise rotation of 135° from inlet	第二出油口在进油口对侧 The second outlet is the opposition side of inlet.
	CB	第二出油口在进油口逆时针转45° The second outlet is to counterclockwise rotation of 45° from inlet	第二出油口在进油口逆时针转90° The second outlet is to counterclockwise rotation of 90° from inlet
	CC	第二出油口在进油口顺时针转45° The second outlet is to clockwise rotation of 45° from inlet	第二出油口在进油口同侧 The second outlet is the same side of inlet.
	CD	第二出油口在进油口顺时针转135° The second outlet is to clockwise rotation of 135° from inlet	第二出油口在进油口顺时针转90° The second outlet is to clockwise rotation of 90° from inlet
第一出油口从进油口顺时针转90°C The first outlet is to clockwise rotation of 90° from inlet	DA	第二出油口在进油口逆时针转135° The second outlet is to counterclockwise rotation of 135° from inlet	第二出油口在进油口对侧 The second outlet is the opposition side of inlet.
	DB	第二出油口在进油口逆时针转45° The second outlet is to counterclockwise rotation of 45° from inlet	第二出油口在进油口逆时针转90° The second outlet is to counterclockwise rotation of 90° from inlet
	DC	第二出油口在进油口顺时针转45° The second outlet is to clockwise rotation of 45° from inlet	第二出油口在进油口同侧 The second outlet is the same side of inlet.
	DD	第二出油口在进油口顺时针转135° The second outlet is to counterclockwise rotation of 135° from inlet	第二出油口在进油口顺时针转90° The second outlet is to clockwise rotation of 90° from inlet

安装连接尺寸 Installation sizes

2520V,35**V和452*V

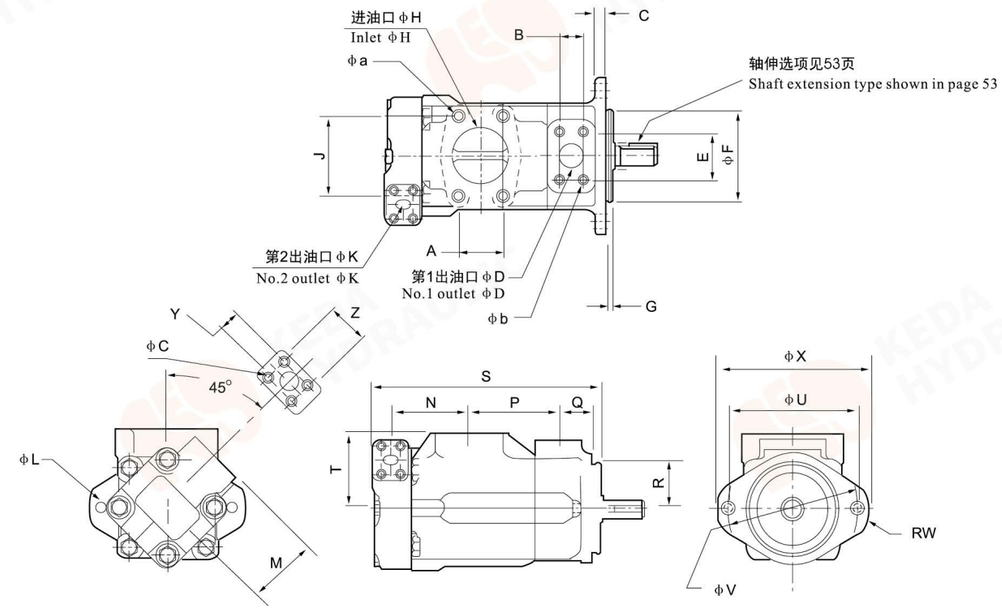

型号 Models	ϕa x 全部螺纹深，4孔 ϕa×all screw holes, 4 holes	ϕb x 全部螺纹深，4孔 ϕb×all screw holes, 4 holes	ϕc x 全部螺纹深，4孔 ϕc×all screw holes, 4 holes
2520V	1/2-13UNC-2B x 23.8深 1/2-13UNC-2B x 23.8 depth	3/8-16UNC-2B x 20.1深 3/8-16UNC-2B x 20.1 depth	3/8-15UNC-2B x 20.1深 3/8-15UNC-2B x 20.1 depth
3520V	5/8-11UNC-2B x 25.4深 5/8-11UNC-2B x 25.4 depth	7/16-14UNC-2B x 21.0深 7/16-14UNC-2B x 21.0 depth	3/8-15UNC-2B x 20.1深 3/8-15UNC-2B x 20.1 depth
3525V	5/8-11UNC-2B x 25.4深 5/8-11UNC-2B x 25.4 depth	7/16-14UNC-2B x 21.0深 7/16-14UNC-2B x 21.0 depth	3/8-15UNC-2B x 20.1深 3/8-15UNC-2B x 20.1 depth
4520V	5/8-11UNC-2B x 25.4深 5/8-11UNC-2B x 25.4 depth	1/2-13UNC-2B x 23.8深 1/2-13UNC-2B x 23.8 depth	3/8-15UNC-2B x 20.1深 3/8-15UNC-2B x 20.1 depth
4525V	5/8-11UNC-2B x 25.4深 5/8-11UNC-2B x 25.4 depth	1/2-13UNC-2B x 23.8深 1/2-13UNC-2B x 23.8 depth	3/8-15UNC-2B x 20.1深 3/8-15UNC-2B x 20.1 depth

型号 Models	A	B	C	D	E	F	G	H	J	K	L	M	N	P	Q
2520V	50.8	26.2	12.7	25.4	52.4	101-6/101.5	9.53	63.5	88.9	19.1	14.2	75.2	88.1	101.6	38.1
3520V	62	30.1	15.9	31.7	58.7	127/126.9	9.53	76.2	106.3	19.1	17.5	75.2	99.6	114.3	38.1
3525V	62	30.1	15.9	31.7	58.7	127/126.9	9.53	76.2	106.3	25.4	17.5	74.7	109.5	114.3	38.1
4520V	69.9	35.7	15.9	38.1	69.9	127/126.9	12.7	88.9	120.6	19.1	17.5	75.2	120	119.4	42.9
4525V	69.9	35.7	15.9	38.1	69.9	127/126.9	12.7	88.9	120.6	25.4	17.5	74.7	136	119.4	42.9

型号Models	R	S	T	U	V	W	X	Y	Z
2520V	76.2	250	85.3	146.1	120	14	174.7	22.2	47.6
3520V	82.6	273.3	88.9	181	148	16	213	22.2	47.6
3525V	82.6	287.3	88.9	181	148	16	213	26.2	52.4
4520V	93.7	303.5	102.4	181	148	16	213	22.2	47.6
4525V	93.7	325	102.4	181	148	16	213	26.2	52.4

安装连接尺寸 Installation sizes

4535V

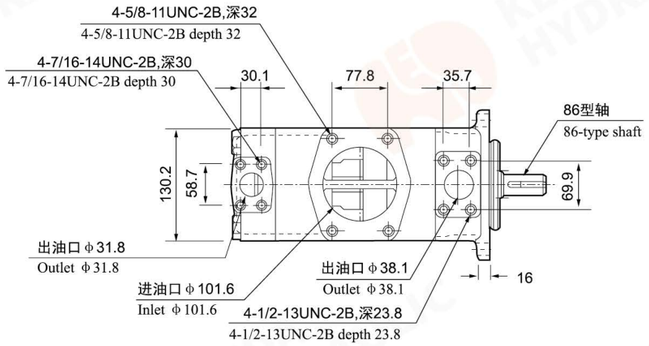

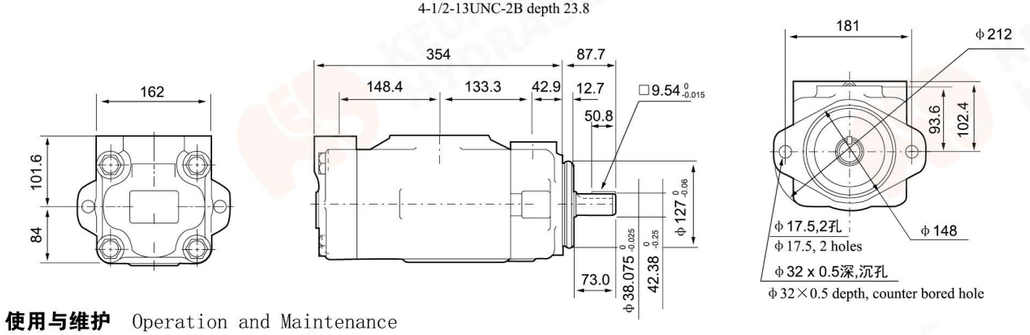

使用与维护 Operation and Maintenance

●液压用油 Hydraulic oil

推荐使用40°C时粘度等级为32-68cst抗磨液压油或带有子母标记SC、SD、SE或SF的汽车曲轴箱油。额定转速和压力下的推荐粘度：最低13cst、最高54cst、最低49°C、最高65°C。

It is recommended to adopt anti-wear hydraulic fluids with viscosity of 32cst-68cst under the temperature of 40℃, or automobile crankcase oil with alphabetic marks of SC, SD, SE or SF. The recommended viscosity under rated rotation speed and rated pressure should range from 13cst to 54cst with the temperature range of 49℃ to 65℃.

●冷启动 Cold start

当使用SAE10W油在860至54cst范围内工作时，转速和压力应限制在它们各自额定的50%以内，直到系统热起来。油液粘度超过860cst启动时要特别注意，要使整个系统包括远处的缸和马达都热起来。

In the case of adopting SAE 10W type hydraulic oil with viscosity between 860cst and 54cst, the operating rotation speed and pressure shall be limited within 50% of rated rotation speed and rated pressure respectively, until the system warms up. Particular attention should be paid to make sure that the whole system including the cylinder and motor on the far away side shall be all warmed up, when the pump starts up with the hydraulic oil viscosity exceeding 860cst.

●高温运行 High temperature operation

在高温运行时，粘度不得低于13cst,温度不得超过99°C，因为泵芯组件和密封件的期望寿命将缩短。

While working under high temperature, the viscosity shall not be less than 13cst, and the temperature shall not exceed 99℃. Otherwise, the service lifetime of pump core components and sealing parts will be reduced.

●噪音数据 Noise data

各系列单泵的平均噪音值测试条件：

The average conditions for noise value testing of series of pumps:

1、静音试验室，转速为1500r/min
2、抗磨液压油，粘度30cst
3、测试油温45-50°C
4、测试距离，距泵后1m

1. Test with rotation speed of 1500r/min in mute laboratory.
2. Anti-wear hydraulic oil with the viscosity of 30cst.
3. The testing temperature of hydraulic oil ranges from 45℃ to 50℃.
4. The distance between the noise sampling site and the back side of pump shall be one meter away.

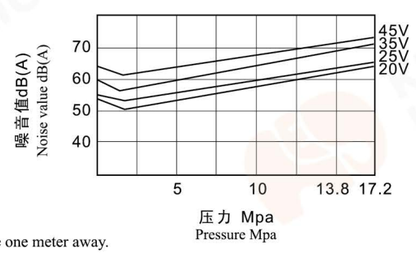

型号说明 Model descriptions

(F3-)	PC-	25V	-5	-R	-10
前注 Front marks	泵芯标记 Pump core marks	系列号 Models	▲排量代号 Displacement code	旋转方向 Direction of rotation	设计号 Designing No.
无标记： 石油系油乳化液 水一乙二醇 No mark: water-in oil emulsion of petroleum series F:磷酸酯液 F:Sul phosuccinic ester fatty of acid	PC-单泵泵芯 PC-single pump core 双联泵轴端泵芯 Shaft end core of double vane pumps PCT-双联泵盖端泵芯 PCT-cover end core of double vane pumps	20V	2,3,4,5,6,7,8,9,10,11,12,14	（从泵的轴端看） (from shaft end pump) L-逆时针旋转 L-counterclockwise rotation R-顺时针旋转 R-clockwise rotation	10
		25V	10,12,14,15,17,19,21		
		35V	21,25,30,32,35,38,45		
		45V	42,45,50,57,60,66,75		

▲在1200r/min和0.69Mpa（100psi）下的额定排量Usgpm。
The rated displacement(Usgpm) is under the conditions of 1200r/min and 0.69Mpa(100psi).
性能参数：与相应系列，规格的油泵性能参数一致，详见V系列单泵的性能参数。
The specifications of double vane pumps are the same with relative series of single vane pumps. Please check details on the operating parameter sheets shown in V series of single vane pumps.

安装连接尺寸 Installation sizes

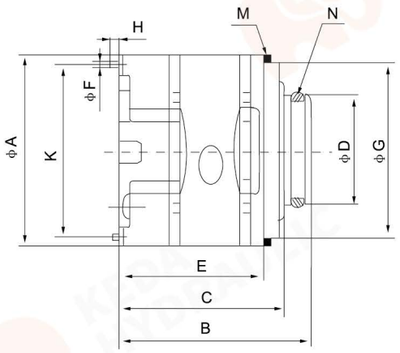

系列号 Models	A	B	C	D	E	F	G	H	K	M（挡圈） M (ring)	N(O型圈) (内径×线径) N (O type ring) (Inner diameter×lead wire diameter)
20V	82.5	81.5	70.1	47	61.5	4.8	76.2	6	73.6	82.76×76.26×3.5	40×3.5
25V	96.8	98.8	87	52.2	71.2	4.8	90.5	5	88.19	97×91×3.5	44×3.53
35V	114.3	117.7	105	72.2	90.3	6.4	108	6	103.94	114.5×108.5×3.5	63.09×3.53
45V	133.35	141.1	129.6	80.2	105.5	6.4	127	10	133.35	133.6×127.6×3.5	71×3.55

系列号 Models	转子内花键齿廓参数 Spline teeth No. in rotor				
	模数 Modulus	齿数 No. of teeth	标准压力角 Standard angle	大径 Major diameter	小径 Minor diameter
20V	48/96	30	45°	16.617	15.56
25V	48/96	40	45°	21.9	20.86
35V	40/80	37	45°	24.38	23.1
45V	12/24	14	30°	32.59	27.60

VQ 系列单泵 VQ series single pumps

适合行走机械的高性能子母叶片泵
High performance composition vane pumps for walking machinery

产品外观及简介 Shape and introduction

本系列是专为工程机械开发的高压高性能子母叶片泵，适用于工程机械，尤其行走机械的场合。其主要特点：
The series high pressure resistant composition vane pumps with high performance are developed for engineering machinery application, especially for walking machinery. The main features are as follows:

1 、采用液压平衡的子母叶片结构设计，压力更高，最高达到21 Mpa:
2 、采用浮动侧板结构，可以自动补偿间隙，达到压力平衡，实现高转速高压力的优越性能；
3 、侧板采用双金属挠性材料，极大提高抗咬合性能，使泵的效果更高，寿命更长。

1. Adopt the structure of hydraulic balancing composition vanes, making the resistant pressure higher to maximum 21 Mpa.
2. Adopt the structure of floating side plate supporting with its function of automatic tolerance compensation, which helps to get pressure balance and high performance under high rotation speed and high pressure.
3. Adopt bimetal flexible material for side plates, which dramatically improves the engagement performance of the gears and thus makes the pump working better and longer.

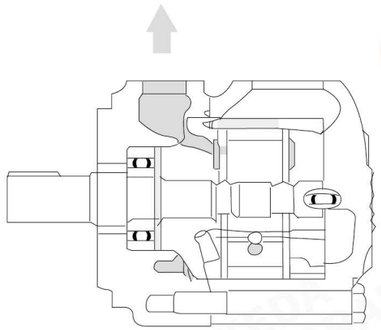

功能符号
Functional sign

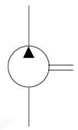

型号说明 Model descriptions:

(F3-)	25VQ	21	A	(F)	-1	A	20	L
前注 Front marks	系列号 Code of series	▲排量代号 Displacement codes	油口连接 Pump port connection	安装型式 Mounting type	轴伸形式 Shaft extension	出油口位置 Outlet port position	设计号 Designing No.	旋转方向 Direction of rotation
无标记： 石油系油乳化液水一乙二醇 No mark: water-in oil emulsion of petroleum series F3:磷酸酯液 F3: Sul phosuccinic ester fatty of acid	20VQ	2,3,4,5,6,7,8,9 10,11,12,14	A-SAE 4螺栓法兰 4-bolted Flange	无标记： No marks: 法兰安装型 Flange mounting F-脚座安装型 F-Foot mounting	1-带键直轴 1- straight shaft with key 151-花键轴 151-spline shaft	（从泵的盖端看） (from cover end pump) A-进口油对侧 A- Opposition of inlet B-从进口油逆时针90° B- counterclockwise 90° from inlet C-进口油同侧 C- the same side of inlet D-从进口油顺时针90° D- Clockwise 90° from inlet	30	(从泵的轴端看) (from shaft end pump) L-逆时针旋转 L-counterclockwise rotation 无标记： No marks: 顺时针旋转 Clockwise rotation
	25VQ	10,12,14,15,17, 19,21			1-带键直轴 1- straight shaft with key 86-重型带键直轴 86-heavy-duty straight shaft with key 11-花键轴 11-spline shaft		20	
	35VQ	21,25,30,32,35, 38,45						
	45VQ	42,45,50,57,60 66,75						

▲在1200r/min和0.69MPa(100psi)下的额定排量USgpm。
The rated displacement (USgpm) is under the conditions of 1200r/min and 0.69 Mpa(100psi).

VQ 系列单泵 VQ series single pumps

工作参数 Operating parameters

型号 Models	排量代号 Displacement code	几何排量 Geometric displacement（ml/r）	最高转速 Max speed（r/min）	最高压力 Max pressure（Mpa）	典型输出流量 Typical outlet flow（L/min） 最高转速及最高压力 under Max speed and Max pressure	典型输出功率 Typical outlet power（KW） 最高转速及最高压力 under Max speed and Max pressure	重量 Weight
20VQ	2	7	2700	21	16.4	7.2	11.8
	3	11.7	2700	21	24.4	10.8	
	4	15	2700	21	32.7	14.4	
	5	18	2700	21	42.3	17.9	
	6	19	2700	21	50.6	21.5	
	7	22	2700	21	58.8	23.7	
	8	27	2700	21	56.4	25.1	
	9	30	2700	21	73.4	26.0	
	10	31.5	2700	21	81.7	26.8	
	11	36	2700	21	88.5	27.7	
	12	40	2700	16	96.5	28.4	
	14	45	2700	14	115.4	29.1	
25VQ	10	32.5	2700	21	81.4	35.2	14.5
	12	38.3	2700	21	88.5	41.0	
	14	43.3	2700	21	103.8	46.6	
	15	47.3	2500	21	109.4	48.1	
	17	52.5	2500	21	119.2	51.8	
	19	60	2500	21	133.5	55.2	
	21	65.0	2500	21	146.2	61.9	
35VQ	21	64.0	2500	21	145.5	63.7	22.7
	25	79.2	2500	21	173.1	75.3	
	30	95.0	2500	21	211.5	87.7	
	32	101	2500	21	220.2	92.2	
	35	109	2400	21	230.8	98.5	
	38	118	2400	21	250	104.4	
	45	147	2400	21	271.2	99.8	
45VQ	42	134	2400	17.5	255.8	91.4	34.1
	45	147	2200	17.5	271.2	99.8	
	50	156	2200	17.5	303.8	105.2	
	57	180	2200	17.5	343.7	120.2	
	60	189	2200	17.5	369.2	126.8	
	66	208	2200	17.5	408.7	142.4	
	75	237	2200	14	460	120.2	

性能参数：SAE 10W油液▲82℃(180°F)，泵进口▲0 PSIG（14.7/Psia） 注：出口必须始终高于进口压力。
Performance parameters: SAE 10W hydraulic fluid ▲82℃ (180° F), pump inlet ▲0 PSIG (14.71/Psia) Notes:The pressure of outlet port must be higher than the one of inlet port.

安装连接尺寸 Installation sizes

20VQ法兰安装 20VQ Flange mounting

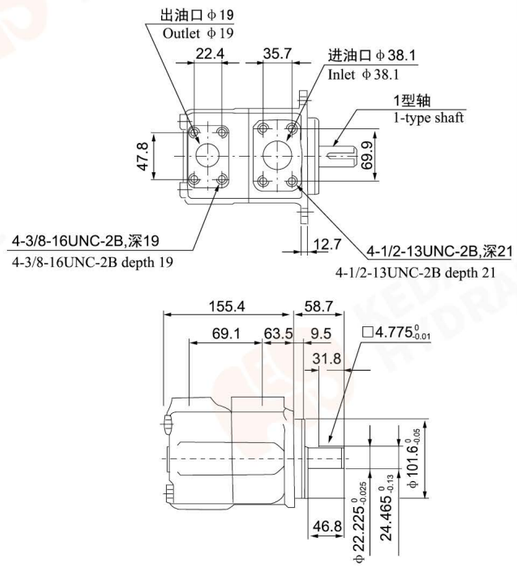

20VQ脚座安装 20VQ foot mounting

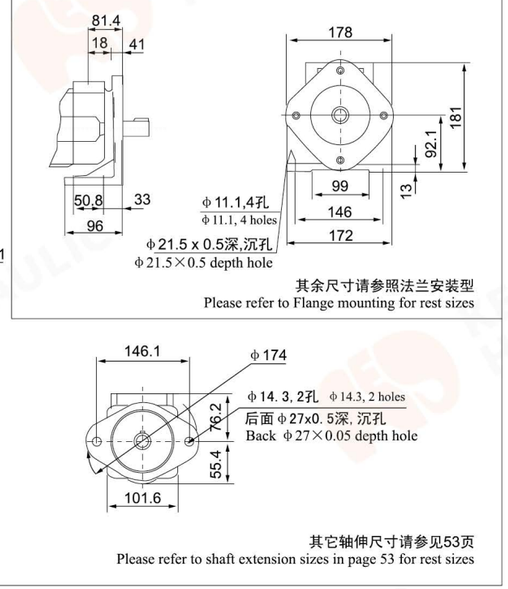

25VQ法兰安装 25VQ Flange mounting

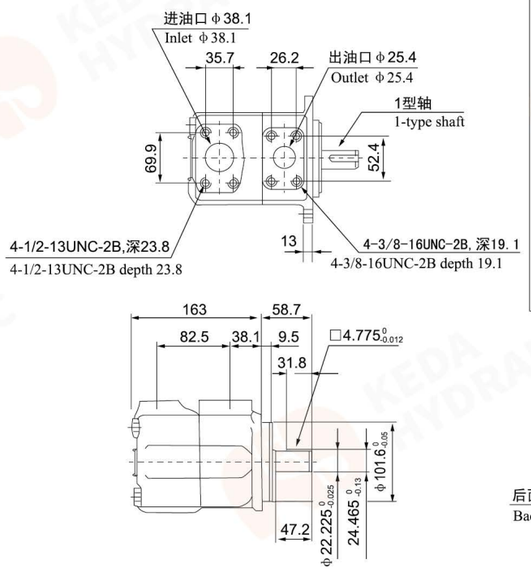

25VQ脚座安装 25VQ foot mounting

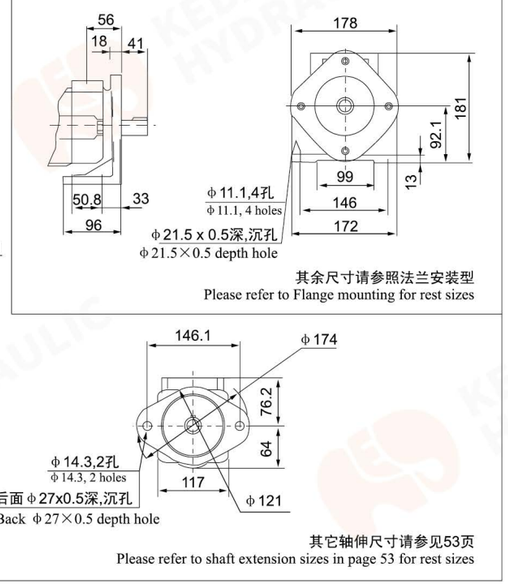

安装连接尺寸 Installation sizes

35VQ法兰安装 35VQ Flange mounting

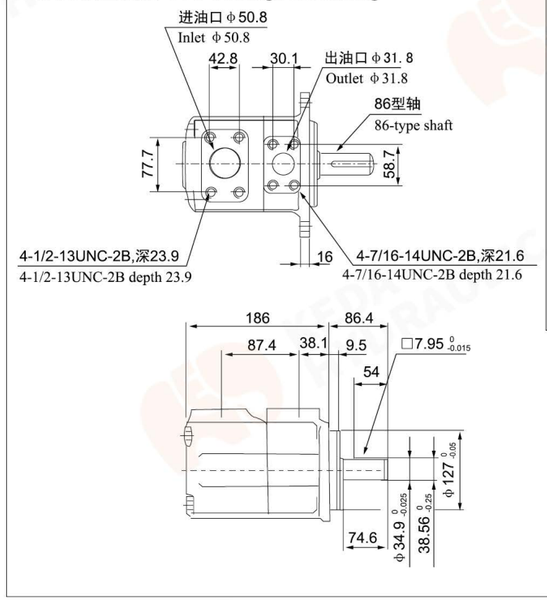

35VQ脚座安装 35VQ foot mounting

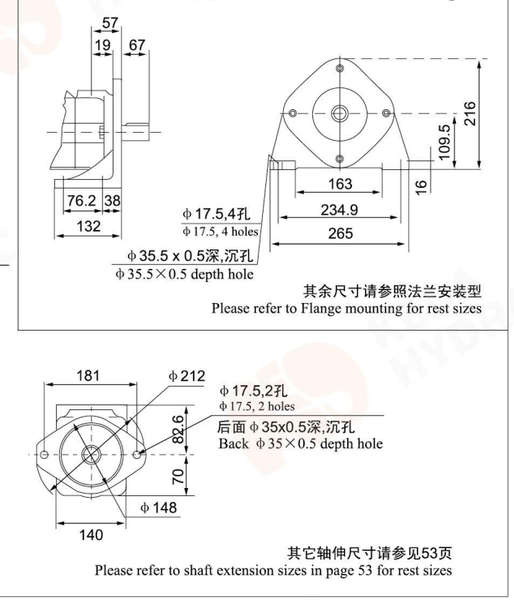

45VQ法兰安装 45VQ Flange mounting

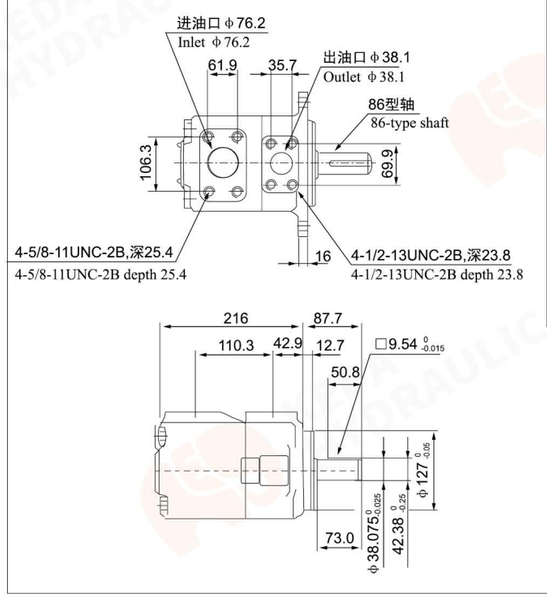

45VQ脚座安装 45VQ foot mounting

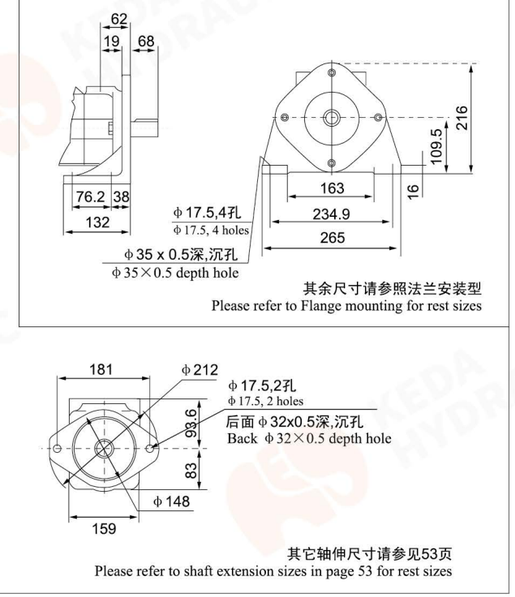

VQ系列双联泵 VQ series double pumps

适合行走机械的高性能子母叶片泵
High performance composition vane pumps for walking machinery

产品外观及简介 Shape and introduction

本系列是专为工程机械开发的高压高性能子母叶片泵，适用于工程机械，尤其行走机械的场合。其主要特点：
The series high pressure resistant composition vane pumps with high performance are developed for engineering machinery application, especially for walking machinery. The main features are as follows:

1 、采用液压平衡的子母叶片结构设计，压力更高，最高达到21 Mpa:
2 、采用浮动侧板结构，可以自动补偿间隙，达到压力平衡，实现高转速高压力的优越性能；
3 、侧板采用双金属挠性材料，极大提高抗咬合性能，使泵的效果更高，寿命更长。

1. Adopt the structure of hydraulic balancing composition vanes, making the resistant pressure higher to maximum 21 Mpa.
2. Adopt the structure of floating side plate supporting with its function of automatic tolerance compensation, which helps to get pressure balance and high performance under high rotation speed and high pressure.
3. Adopt bimetal flexible material for side plates, which dramatically improves the engagement performance of the gears and thus makes the pump working better and longer.

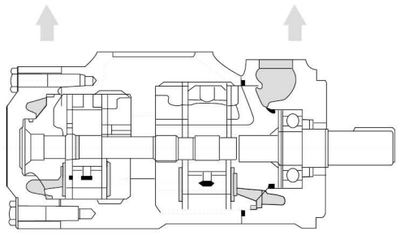

功能符号
Functional sign

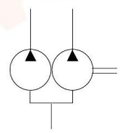

型号说明 Model descriptions:

(F3-)	****VQ	**	A	**	(F)	-*	*	20	*
前注 Front marks	系列号 Code of series	▲排量代号 Displacement codes	油口连接 Pump port connection	▲排量代号盖端泵 Displacement code cover end pump	安装型式 Mounting type	轴伸形式 Shaft extension	油口位置 Pump position	设计号 Designing No.	旋转方向 Direction of rotation
无标记： 石油系油乳化液水一乙二醇 No mark: water-in oil emulsion of petroleum series F3:磷酸酯液 F3: Sul phosuccinic ester fatty of acid	2520VQ	10,12,14,15,17,19,21	A-SAE 4螺栓法兰 4-bolted Flange	2,3,4,5,6,7,8,9,10,11,12,14	无标记： No marks: 法兰安装型 Flange mounting F- 脚座安装型 F-Foot mounting	1-带键直轴 1- straight shaft with key 86-重型带键直轴 86-heavy-duty straight shaft with key 11-花键轴 11-spline shaft	见下表 See as the following table	20	(从泵的轴端看) (from shaft end pump) 无标记： No marks: 顺时针旋转 Clockwise rotation L-逆时针旋转 L-counterclockwise rotation
	3520VQ	21,25,30,32,35,38,45		2,3,4,5,6,7,8,9,10,11,12,14					
	3525VQ	21,25,30,32,35,38,45		10,12,14,15,17,19,21					
	4520VQ	42,45,50,57,60,66,75		2,3,4,5,6,7,8,9,10,11,12,14					
	4525VQ	42,45,50,57,60,66,75		10,12,14,15,17,19,21					
	4535VQ	42,45,50,57,60,66,75		21,25,30,32,35,38,45					

▲在1200r/min和0.69MPa(100psi)下的额定排量USgpm。
The rated displacement (USgpm) is under the conditions of 1200r/min and 0.69 Mpa(100psi).

油口位置表（从泵的盖端看） Pump oil port position(viewed from cover end pump)

●2520VQ
●3520VQ
●3525VQ
●4520VQ
●4525VQ

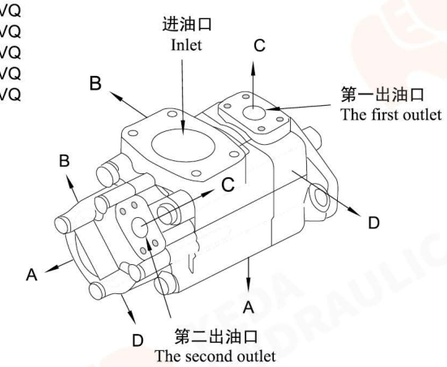

●4535VQ

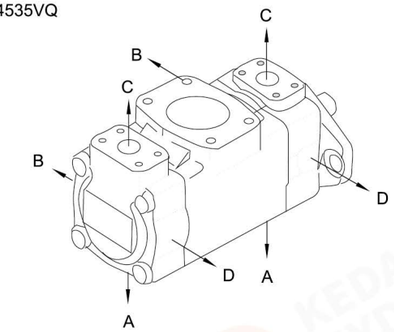

油口位置 Pump position		所有系列（除4535VQ外） All series (except for 4535VQ)	4535VQ
第一出油口在进油口对侧 The first outlet is the opposition side of inlet.	AA	第二出油口在进油口逆时针转135° The second outlet is to counterclockwise rotation of 135° from inlet	第二出油口在进油口对侧 The second outlet is the opposition side of inlet.
	AB	第二出油口在进油口逆时针转45° The second outlet is to counterclockwise rotation of 45° from inlet	第二出油口在进油口逆时针转90° The second outlet is to counterclockwise rotation of 90° from inlet
	AC	第二出油口在进油口顺时针转45° The second outlet is to clockwise rotation of 45° from inlet	第二出油口在进油口同侧 The second outlet is the same side of inlet.
	AD	第二出油口在进油口顺时针转135° The second outlet is to clockwise rotation of 135° from inlet	第二出油口在进油口顺时针转90° The second outlet is to clockwise rotation of 90° from inlet
第一出油口从进油口逆时针转90°C The first outlet is to counterclockwise rotation of 90° from inlet	BA	第二出油口在进油口逆时针转135° The second outlet is to counterclockwise rotation of 135° from inlet	第二出油口在进油口对侧 The second outlet is the opposition side of inlet.
	BB	第二出油口在进油口逆时针转45° The second outlet is to counterclockwise rotation of 45° from inlet	第二出油口在进油口逆时针转90° The second outlet is to counterclockwise rotation of 90° from inlet
	BC	第二出油口在进油口顺时针转45° The second outlet is to clockwise rotation of 45° from inlet	第二出油口在进油口同侧 The second outlet is the same side of inlet.
	BD	第二出油口在进油口顺时针转135° The second outlet is to clockwise rotation of 135° from inlet	第二出油口在进油口顺时针转90° The second outlet is to clockwise rotation of 90° from inlet
第一出油口在进油口同侧 The first outlet is the same side of inlet.	CA	第二出油口在进油口逆时针转135° The second outlet is to counterclockwise rotation of 135° from inlet	第二出油口在进油口对侧 The second outlet is the opposition side of inlet.
	CB	第二出油口在进油口逆时针转45° The second outlet is to counterclockwise rotation of 45° from inlet	第二出油口在进油口逆时针转90° The second outlet is to counterclockwise rotation of 90° from inlet
	CC	第二出油口在进油口顺时针转45° The second outlet is to clockwise rotation of 45° from inlet	第二出油口在进油口同侧 The second outlet is the same side of inlet.
	CD	第二出油口在进油口顺时针转135° The second outlet is to clockwise rotation of 135° from inlet	第二出油口在进油口顺时针转90° The second outlet is to clockwise rotation of 90° from inlet
第一出油口从进油口顺时针转90°C The first outlet is to clockwise rotation of 90° from inlet	DA	第二出油口在进油口逆时针转135° The second outlet is to clockwise rotation of 135° from inlet	第二出油口在进油口对侧 The second outlet is the opposition side of inlet.
	DB	第二出油口在进油口逆时针转45° The second outlet is to counterclockwise rotation of 45° from inlet	第二出油口在进油口逆时针转90° The second outlet is to counterclockwise rotation of 90° from inlet
	DC	第二出油口在进油口顺时针转45° The second outlet is to clockwise rotation of 45° from inlet	第二出油口在进油口同侧 The second outlet is the same side of inlet.
	DD	第二出油口在进油口顺时针转135° The second outlet is to counterclockwise rotation of 135° from inlet	第二出油口在进油口顺时针转90° The second outlet is to clockwise rotation of 90° from inlet

安装连接尺寸 Installation sizes

2520VQ法兰安装 2520VQ Flange mounting

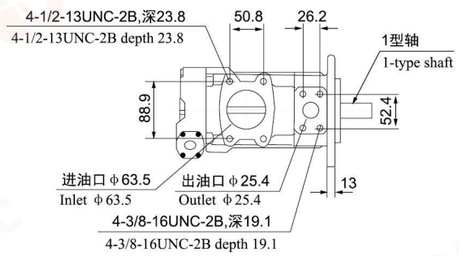

2520VQ脚座安装 2520VQ foot mounting

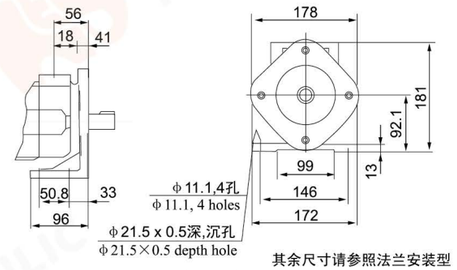

其余尺寸请参照法兰安装型
Please refer to Flange mounting for rest sizes

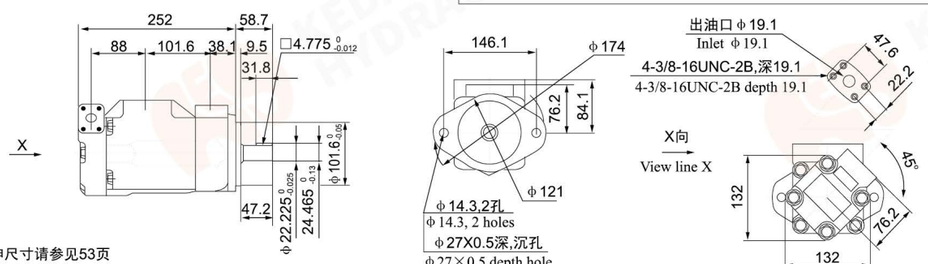

其它轴伸尺寸请参见53页
Please refer to shaft extension sizes in page 53 for rest sizes

3520VQ法兰安装 3520VQ Flange mounting

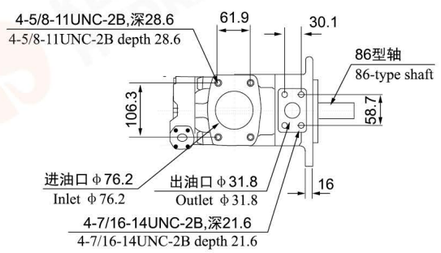

3520VQ脚座安装 3520VQ foot mounting

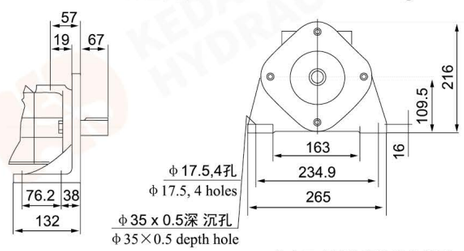

其余尺寸请参照法兰安装型
Please refer to Flange mounting for rest sizes

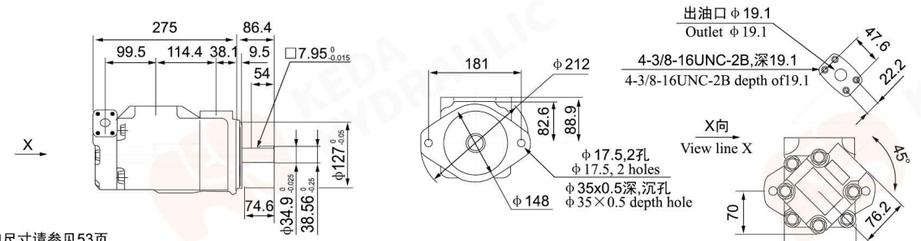

其它轴伸尺寸请参见53页
Please refer to shaft extension sizes in page 53 for rest sizes

安装连接尺寸 Installation sizes

3525VQ法兰安装 3525VQ Flange mounting

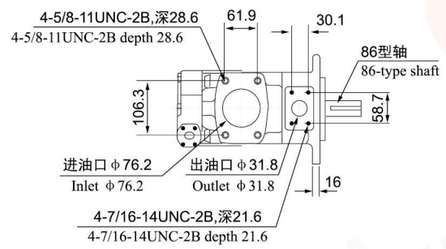

3525VQ脚座安装 3525VQ foot mounting

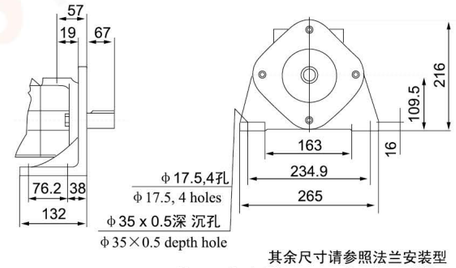

其余尺寸请参照法兰安装型
Please refer to Flange mounting for rest sizes

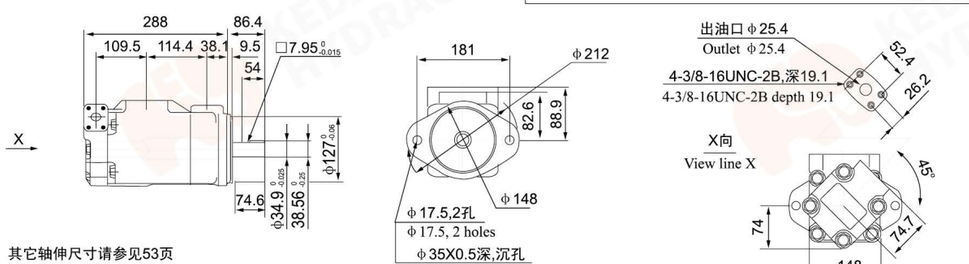

其它轴伸尺寸请参见53页
Please refer to shaft extension sizes in page 53 for rest sizes

4520VQ法兰安装型 4520VQ Flange mounting

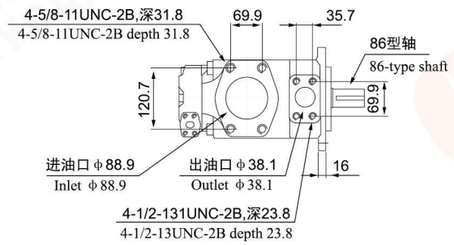

4520VQ脚座安装型 4520VQ foot mounting

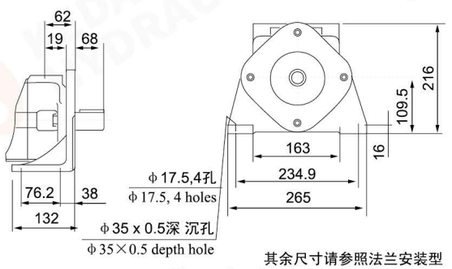

其余尺寸请参照法兰安装型
Please refer to Flange mounting for rest sizes

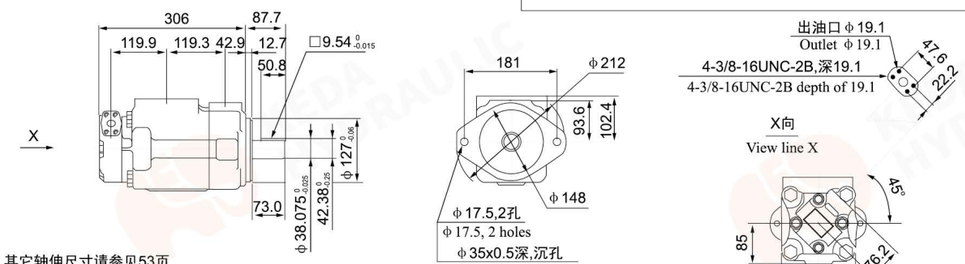

其它轴伸尺寸请参见53页
Please refer to shaft extension sizes in page 53 for rest sizes

安装连接尺寸 Installation sizes

4525VQ法兰安装 4525VQ Flange mounting

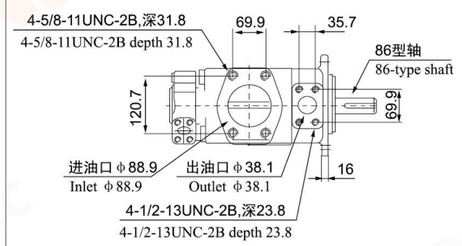

4525VQ脚座安装 4525VQ foot mounting

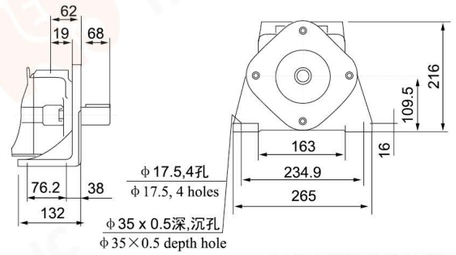

其余尺寸请参照法兰安装型
Please refer to Flange mounting for rest sizes

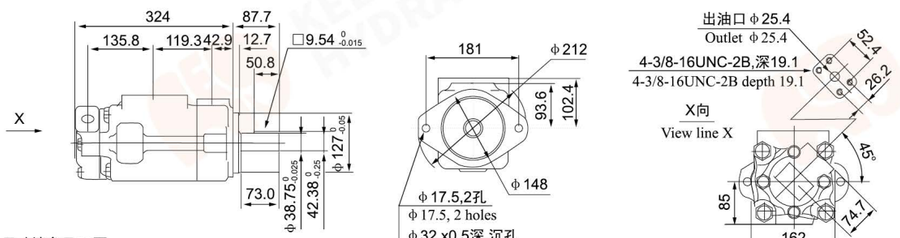

其它轴伸尺寸请参见53页
Please refer to shaft extension sizes in page 53 for rest sizes

4535VQ法兰安装型 4535VQ Flange mounting

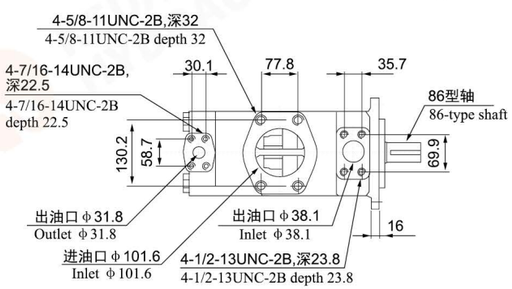

4535VQ脚座安装型 4535VQ foot mounting

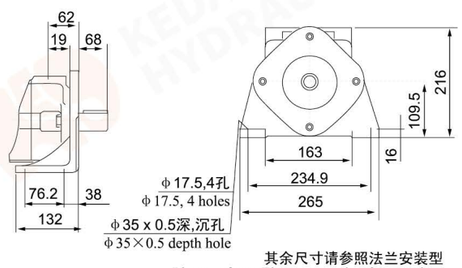

其余尺寸请参照法兰安装型
Please refer to Flange mounting for rest sizes

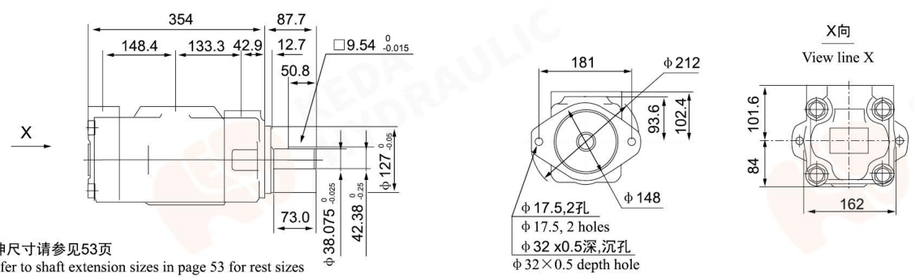

其它轴伸尺寸请参见53页
Please refer to shaft extension sizes in page 53 for rest sizes

VQ系列泵芯 VQ series pump core

型号说明 Model Descriptions:

（F3-）	PC-	20VQ	-5	-R	-10
前注 Front marks	泵芯标记 Pump core marks	系列号 Models	▲排量代号 Displacement code	旋转方向 Direction of rotation	设计号 Designing No.
无标记： 石油系油乳化液 水一乙二醇 No mark: water-in oil emulsion of petroleum series F:磷酸酯液 F:Sul phosuccinic ester fatty of acid	PC-单泵泵芯 PC-single pump core 双联泵轴端泵芯 Shaft end core of double vane pumps PCT-双联泵盖端泵芯 PCT-cover end core of double vane pumps	20VQ	2,3,4,5,6,7,8,9,10,11,12,14	（从泵的轴端看） (from shaft end pump) L-逆时针旋转 L-counterclockwise rotation R-顺时针旋转 R-clockwise rotation	10
		25VQ	10,12,14,15,17,19,21		
		35VQ	21,25,30,32,35,38,45		
		45VQ	42,45,50,57,60,66,75		

▲在1200r/min和0.69Mpa（100psi）下的额定排量Usgpm。
The rated displacement USgpm is under the conditions of 1200r/min and 0.69 Mpa(100psi).
性能参数：与相应系列，规格的油泵性能参数一致，详见VQ系列单泵的性能参数。
The specifications of double vane pumps are the same with relative series of single vane pumps. Please check details on the operating parameter sheets shown in VQ series of single vane pumps.

安装连接尺寸 Installation sizes

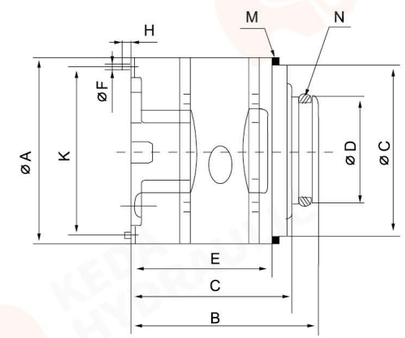

系列号 Models	A	B	C	D	E	F	G	H	K	M（挡圈） M (ring)	N(O型圈) (内径×线径) N (O type ring) (Inner diameter×lead wire diameter)
20VQ	82.5	81.5	70.1	47	61.5	4.8	76.2	6	73.6	82.76×76.26×3.5	40×3.5
25VQ	96.8	98.8	87	52.2	71.2	4.8	90.5	5	88.19	97×91×3.5	44×3.53
35VQ	114.3	117.7	105	72.2	90.3	6.4	108	6	103.94	114.5×108.5×3.5	63.09×3.53
45VQ	133.35	141.1	129.6	80.2	105.5	6.4	127	10	133.35	133.6×127.6×3.5	71×3.55

系列号 Models	转子内花键齿廓参数 Spline teeth No. in rotor				
	模数 Modulus	齿数 No. of teeth	标准压力角 Standard angle	大径 Major diameter	小径 Minor diameter
20VQ	48/96	30	45°	16.617	15.56
25VQ	48/96	40	45°	21.9	20.86
35VQ	40/80	37	45°	24.38	23.1
45VQ	12/24	14	30°	32.59	27.60

V（VQ)泵配用法兰连接尺寸 V（VQ）Flange Installation sizes

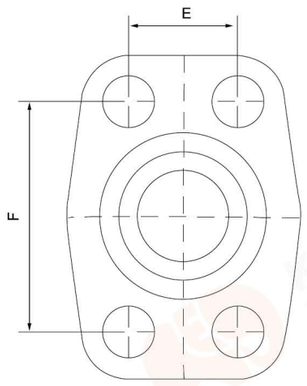

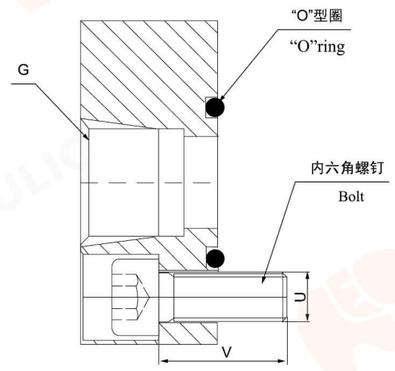

配泵的型号 Models	尺寸 Demension (mm)			内六角螺钉 Bolt		"O"型圈（内径×线径）"O"ring
	E	F	G	U	V（mm）	
20V (VQ) 出油口Outlet	22. 22	47. 6	3/4	3/8–16UNC	30	28×3.55
25V (VQ) 出油口Outlet	26. 2	52. 4	1	3/8–16UNC	30	34.5×3.55
35V (VQ) 出油口Outlet	30. 2	58. 7	$1\frac{1}{4}$	7/16–14UNC	35	40×3.55
45V (VQ) 出油口Outlet 20V (VQ)，25V (VQ) 出油口Outlet	35. 7	69. 9	$1\frac{1}{2}$	1/2–13UNC	40	50×3.55
35V (VQ) 进油口inlet	42. 9	77. 8	2	1/2–13UNC	40	63.09×3.55
45V (VQ) 3520V (VQ)，3525V (VQ) 出油口Outlet	62	106. 4	3	5/8–11UNC	45	82.5×3.55
2520V (VQ) 进油口inlet	50. 8	88. 9	$2\frac{1}{2}$	1/2–13UNC	45	71×3.55
4520（4525）V (VQ) 进油口inlet	69. 9	120. 6	$3\frac{1}{2}$	5/8–11UNC	50	100×3.55
4535V (VQ) 进油口inlet	77. 8	130. 2	4	5/8–11UNC	50	115×3.55

SQP系列单泵 SQP series single pumps

产品外观 Shape

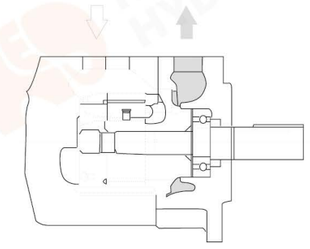

功能符号
Functional sign

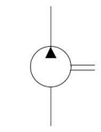

本系列是专为低噪音工况而开发的高压高性能子母叶片泵。适用于塑料机械，压铸机械，机床以及工程机械等要求噪音较低的液压系统中。其主要特点：

1、泵芯使用V系列子母叶片泵泵芯，完全互换，使用更灵活方便。
2、增加了脉动衰减结构的设计，极大降低了压力的脉动，使噪音更低，音质更流畅。
3、使用加厚的外壳设计，增加了泵的强度和抗震性，同时消音性能更优越。

SQP series single pumps are composition vane pumps with high pressure resistance and high performance, especially developed for application in the industries of plastic machinery, forging machinery, machine tool industry and engineering machinery, where lower noise is required. The main features are as follows:

1. Adopt V series composition vane pump core, making the application flexible by its complete interchangeable advantage.
2. Adopt the structure of pulsation attenuation, dramatically reducing the pulsation of pressure with lower noise.
3. Adopt the designing with thick pump casing, making the pump with stronger strength, stronger vibration resistance and better performance of silencing.

型号说明 Model descriptions

(F3-)	SQP2	-21	-86	C	(F)	（LH）	-18
前注、油液相容性 Front marks, compatibility between hydraulic oil and fluid	泵壳号 Pump shell No	▲排量代号 Displacement codes	轴伸形式 Shaft extension	出油口位置 Outlet port position	安装型式 Mounting type	旋转方向 Direction of rotation	设计号 Designing No.
无标记-使用抗磨液压油或磷酸脂液 No marks- use anti-wear hydraulic oil or F11-使用水乙二醇液 F11- use water- glycol fluid F3-使用油包水乳化液 F3- use water-in-oil emulsion	SQP1	2,3,4,5,6,7,8,9 10,11,12,14	1带键直轴 1 straight shaft with key 86-重型带键直轴 86- heavy-duty straight shaft with key	（从泵的盖端看）(from cover end pump) A-进口油对侧 A- Opposition of inlet B-从进口油逆时针90° B- counterclockwise 90° from inlet C-进口油同侧 C- the same side of inlet D-从进口油顺时针90° D- Clockwise 90° from inlet	无标记法兰安装 No mark Flange mounting F: 脚座安装型 foot mounting	（从泵的盖端看）(from cover end pump) LH-逆时针旋转 LH-counterclockwise rotation 无标记 No mark 顺时针旋转 Clockwise rotation	15
	SQP2	10,11,12,14,15,17, 19,21					18
	SQP3	21,25,30,32,35, 38,45					
	SQP4	42,45,50,57,60 66,75					

▲在1200r/min和0.69MPa（100psi）下的额定排量USgpm.
The rated displacement USgpm is under the conditions of 1200r/min and 0.69Mpa(100psi).

噪音数据 测试条件ISO VG32、(50℃), 距离1m

Noise data testing conditions ISO VG32,(50℃), distance of 1m

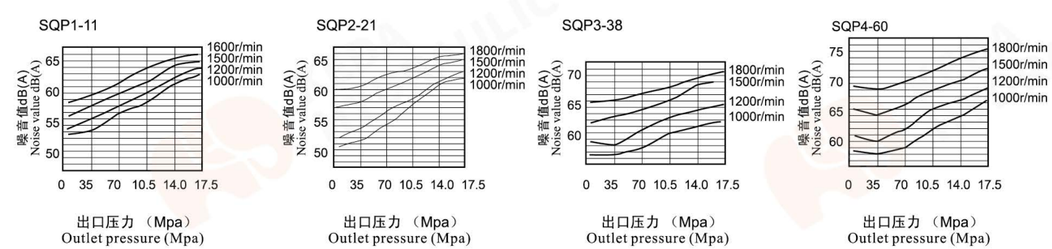

工作参数 Operating parameters

泵壳号 Pump shell No	●排量代号 Displacement code	几何排量 Geometric displacement (mL/r)	SQP 使用抗磨液压油或磷酸酯液 Anti-wear hydraulic oil or phospholipid		F11-SQP 使用水乙二醇液 Water glycol fluid		F3-SQP 使用油包水乳化液 Water-in-oil emulsion		最低转速 Mini speed (r/min)
			最高压力 Max pressure (Mpa)	最高转速 Max speed (r/min)	最高压力 Max pressure (Mpa)	最高转速 Max speed (r/min)	最高压力 Max pressure (Mpa)	最高转速 Max speed (r/min)	
SQP1	2	7.5	13.8	1800	13.8	1200	13.8	1200	600
	3	10.2							
	4	12.8	17.2		15.7				
	5	16.7							
	6	19.2							
	7	22.9							
	8	26.2							
	9	28.8							
	10	31.0							
	11	35.0							
	12	37.9	15.7		15.7				
	14	44.2	13.8		13.8				
SQP2	10	32.5	17.2	1800	17.2	1200	13.8	1200	600
	12	38.3							
	14	43.3							
	15	46.7							
	17	52.5							
	19	59.2							
	21	65.0							
SQP3	21	66.7	17.2	1800	17.2	1200	13.8	1200	600
	25	79.2							
	30	95.0							
	32	100							
	35	109							
	38	118							
	45	140							
SQP4	42	134	17.2	1800	17.2	1200	13.8	1200	600
	45	140							
	50	156							
	57	178							
	60	189							
	66	207							
	75	237							

●在1200r/min和0.69MPa(100psi)下的额定排量USgpm。▲0.5秒内，允许超过最高压力10%的瞬时压力。
The rated displacement USgpm is under the conditions of 1200r/min and 0.69Mpa(100psi).
The instantaneous pressure is allowed to exceed 10% of the Max pressure for within 0.5 seconds long.

安装连接尺寸 Installation sizes

SQP1法兰安装型 SQP1 Flange mounting

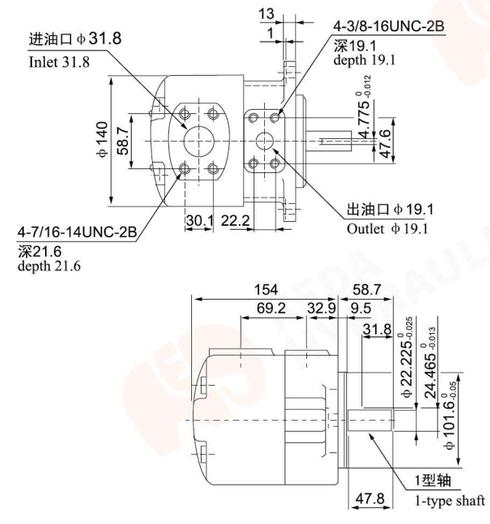

SQP1脚座安装型 SQP1 foot mounting

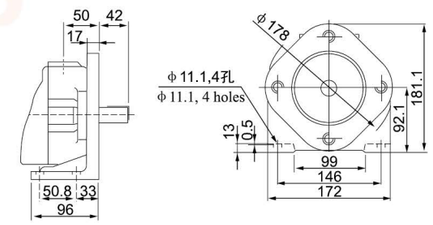

其余尺寸请参照法兰安装型
Please refer to Flange mounting for rest sizes

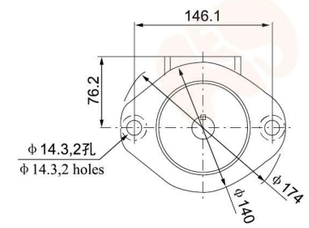

其它轴伸尺寸请参见53页
Please refer to shaft extension sizes in page 53 for rest sizes

SQP2法兰安装型 SQP2 Flange mounting

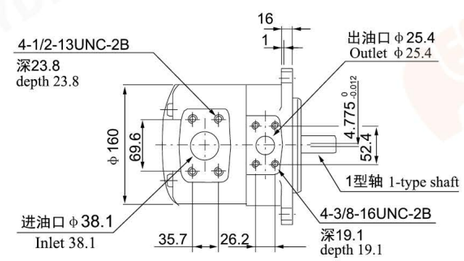

SQP2脚座安装型 SQP2 foot mounting

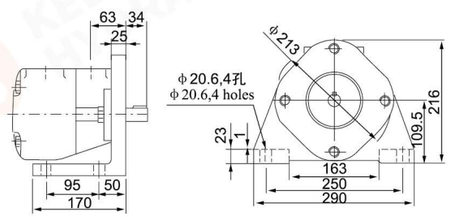

其余尺寸请参照法兰安装型
Please refer to Flange mounting for rest sizes

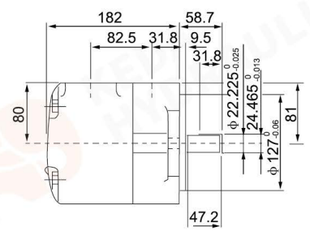

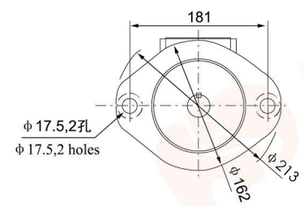

其它轴伸尺寸请参见53页
Please refer to shaft extension sizes in page 53 for rest sizes

安装连接尺寸 Installation sizes

SQP3法兰安装型 SQP3 Flange mounting

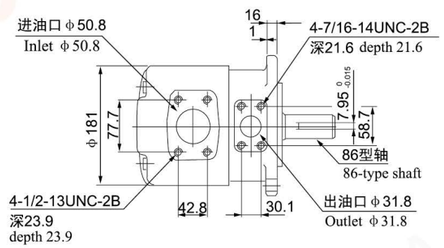

SQP3脚座安装型 SQP3 foot mounting

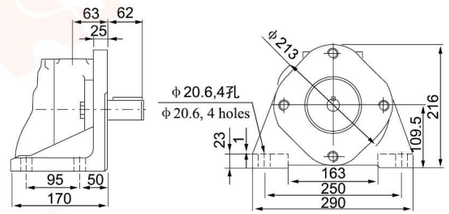

其余尺寸请参照法兰安装型
Please refer to Flange mounting for rest sizes

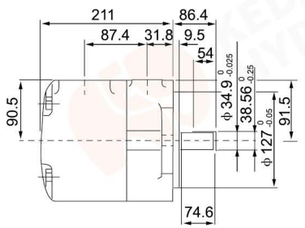

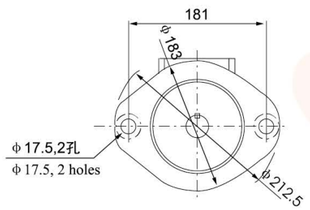

其它轴伸尺寸请参见53页
Please refer to shaft extension sizes in page 53 for rest sizes

SQP4 法兰安装型 SQP4 Flange mounting

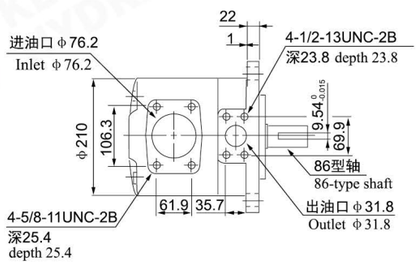

SQP4 脚座安装型 SQP4 foot mounting

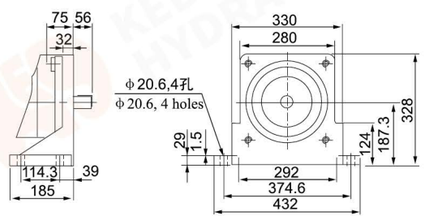

其余尺寸请参照法兰安装型
Please refer to Flange mounting for rest sizes

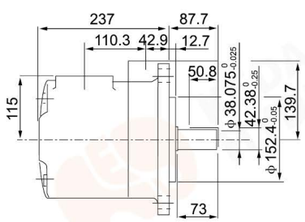

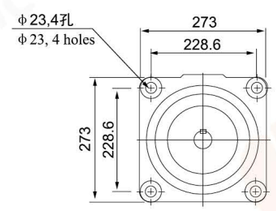

其它轴伸尺寸请参见53页
Please refer to shaft extension sizes in page 53 for rest sizes

SQP系列双联泵 SQP series double vane pumps

产品外观 Shape

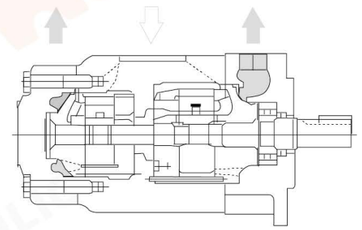

功能符号
Functional signs

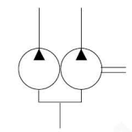

型号说明 Model descriptions:

(F3)	SQP32	35	17	86	CD	(F)	-(LH)	18
前注 Front marks	系列号 Code of series	▲排量代号轴端泵 Displacement code Shaft end pump	▲排量代号盖端泵 Displacement code cover end pump	轴伸形式 Shaft extension	油口位置 Pump position	安装型式 Mounting type	旋转方向 Direction of rotation	设计号 Designing No.
无标记- 使用抗磨液压油或磷酸脂液 No mark-anti-wear hydraulic oil or Sul phosuccinic ester fluid F11- 使用水乙二醇液 F1-adopt water-glycol F3- 使用油包水乳化液 F3- water-in-oil emulsion	SQP21	10,12,14,15,17,19,21	2,3,4,5,6,7,8,9,10,11,12,14	1-带键直轴 1- straight shaft with key 86-重型带键直轴 86-heavy-duty straight shaft with key	见下表 See as the following table	无标记- 法兰安装型 No marks-Flange mounting F- 脚座安装型 foot mounting	（从泵的轴端看） (from shaft end pump) LH-逆时针旋转 LH-counterclockwise rotation 无标记 逆时针旋转 No marks counterclockwise	18
	SQP31	21,25,30,32,35,38,45	2,3,4,5,6,7,8,9,10,11,12,14					
	SQP32	21,25,30,32,35,38,45	10,12,14,15,17,19,21					
	SQP41	42,45,50,57,60,66,75	2,3,4,5,6,7,8,9,10,11,12,14					
	SQP42	42,45,50,57,60,66,75	10,12,14,15,17,19,21					
	SQP43	42,45,50,57,60,66,75	21,25,30,32,35,38,45					

▲在1200r/min和0.69MPa(100psi)下的额定排量USgpm。
The rated displacement USgpm is under the conditions of 1200r/min and 0.69Mpa(100psi).

油口位置表（从泵的盖端看） Pump oil port position (viewed from cover end pump)

油口位置 Pump position

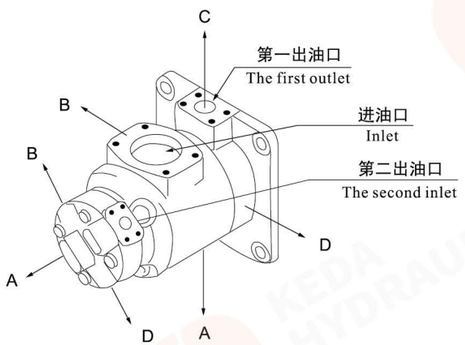

SQP43

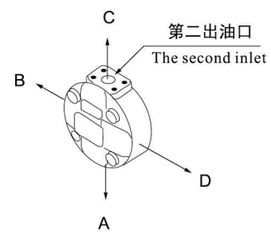

油口位置 Pump position		所有系列（除SQP43外） All series (except for SQP43)	SQP43
第一出油口在进油口对侧 The first outlet is the opposition side of inlet.	AA	第二出油口在进油口逆时针转135° The second outlet is to counterclockwise rotation of 135° from inlet	第二出油口在进油口对侧 The second outlet is the opposition side of inlet.
	AB	第二出油口在进油口逆时针转45° The second outlet is to counterclockwise rotation of 45° from inlet	第二出油口在进油口逆时针转90° The second outlet is to counterclockwise rotation of 90° from inlet
	AC	第二出油口在进油口顺时针转45° The second outlet is to clockwise rotation of 45° from inlet	第二出油口在进油口同侧 The second outlet is the same side of inlet.
	AD	第二出油口在进油口顺时针转135° The second outlet is to clockwise rotation of 135° from inlet	第二出油口在进油口顺时针转90° The second outlet is to clockwise rotation of 90° from inlet
第一出油口从进油口逆时针转90°C The first outlet is to counterclockwise rotation of 90° from inlet	BA	第二出油口在进油口逆时针转135° The second outlet is to counterclockwise rotation of 135° from inlet	第二出油口在进油口对侧 The second outlet is the opposition side of inlet.
	BB	第二出油口在进油口逆时针转45° The second outlet is to counterclockwise rotation of 45° from inlet	第二出油口在进油口逆时针转90° The second outlet is to counterclockwise rotation of 90° from inlet
	BC	第二出油口在进油口顺时针转45° The second outlet is to clockwise rotation of 45° from inlet	第二出油口在进油口同侧 The second outlet is the same side of inlet.
	BD	第二出油口在进油口顺时针转135° The second outlet is to clockwise rotation of 135° from inlet	第二出油口在进油口顺时针转90° The second outlet is to clockwise rotation of 90° from inlet
第一出油口在进油口同侧 The first outlet is the same side of inlet.	CA	第二出油口在进油口逆时针转135° The second outlet is to counterclockwise rotation of 135° from inlet	第二出油口在进油口对侧 The second outlet is the opposition side of inlet.
	CB	第二出油口在进油口逆时针转45° The second outlet is to counterclockwise rotation of 45° from inlet	第二出油口在进油口逆时针转90° The second outlet is to counterclockwise rotation of 90° from inlet
	CC	第二出油口在进油口顺时针转45° The second outlet is to clockwise rotation of 45° from inlet	第二出油口在进油口同侧 The second outlet is the same side of inlet.
	CD	第二出油口在进油口顺时针转135° The second outlet is to clockwise rotation of 135° from inlet	第二出油口在进油口顺时针转90° The second outlet is to clockwise rotation of 90° from inlet
第一出油口从进油口顺时针转90°C The first outlet is to clockwise rotation of 90° from inlet	DA	第二出油口在进油口逆时针转135° The second outlet is to clockwise rotation of 135° from inlet	第二出油口在进油口对侧 The second outlet is the opposition side of inlet.
	DB	第二出油口在进油口逆时针转45° The second outlet is to counterclockwise rotation of 45° from inlet	第二出油口在进油口逆时针转90° The second outlet is to counterclockwise rotation of 90° from inlet
	DC	第二出油口在进油口顺时针转45° The second outlet is to clockwise rotation of 45° from inlet	第二出油口在进油口同侧 The second outlet is the same side of inlet.
	DD	第二出油口在进油口顺时针转135° The second outlet is to counterclockwise rotation of 135° from inlet	第二出油口在进油口顺时针转90° The second outlet is to clockwise rotation of 90° from inlet

安装连接尺寸 Installation sizes

SQP21法兰安装型 SQP21 Flange mounting

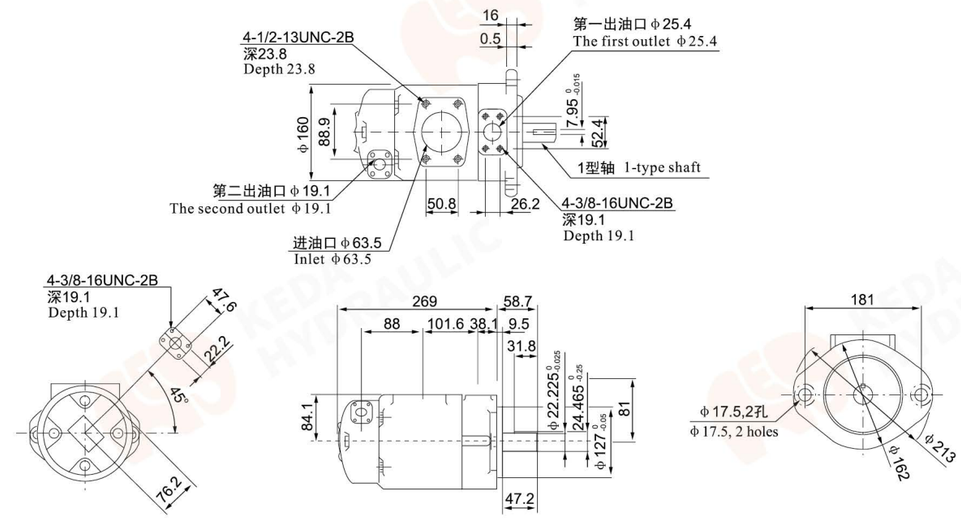

其它轴伸尺寸请参见53页
Please refer to shaft extension sizes in page 53 for rest sizes

SQP31 法兰安装型 SQP31 Flange mounting

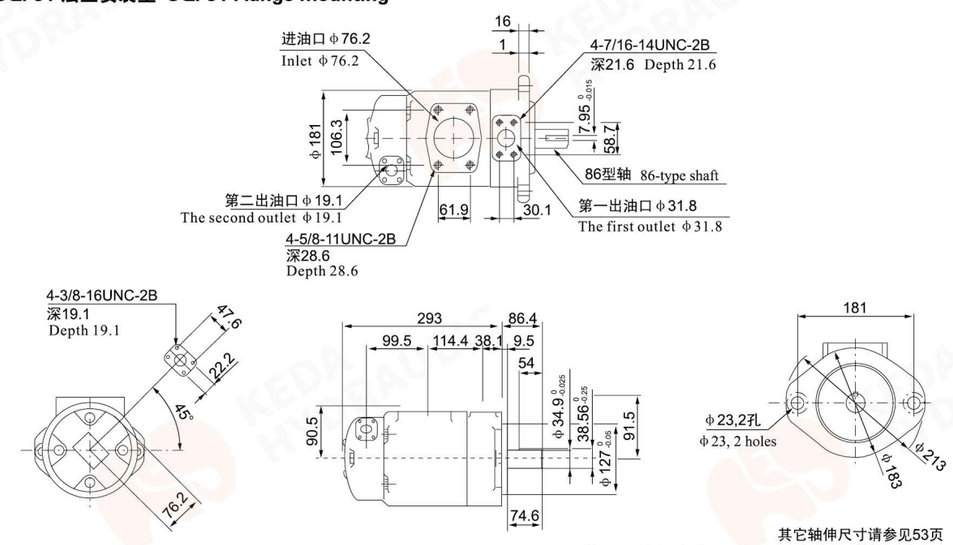

其它轴伸尺寸请参见53页
Please refer to shaft extension sizes in page 53 for rest sizes

安装连接尺寸 Installation sizes

SQP32法兰安装型 SQP32 Flange mounting

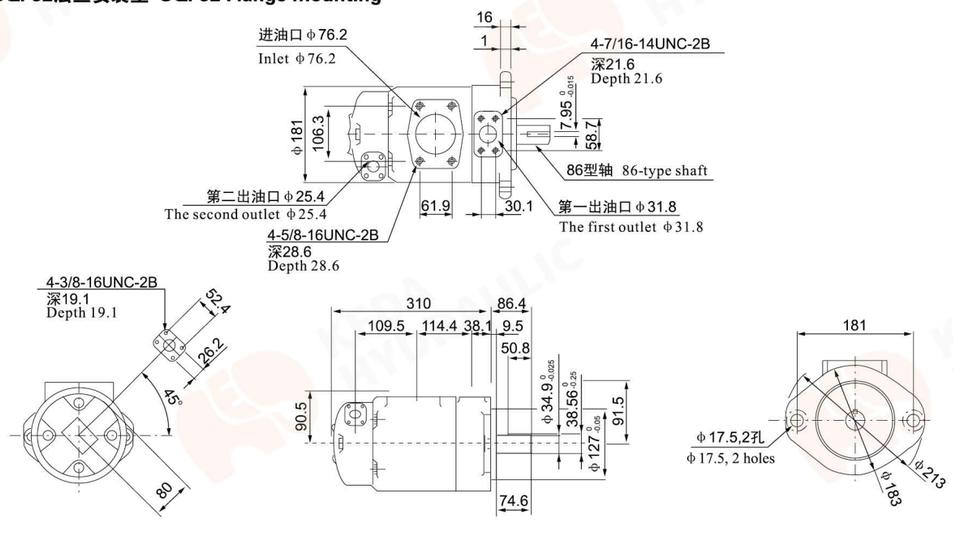

其它轴伸尺寸请参见53页
Please refer to shaft extension sizes in page 53 for rest sizes

SQP41 法兰安装型 SQP41 Flange mounting

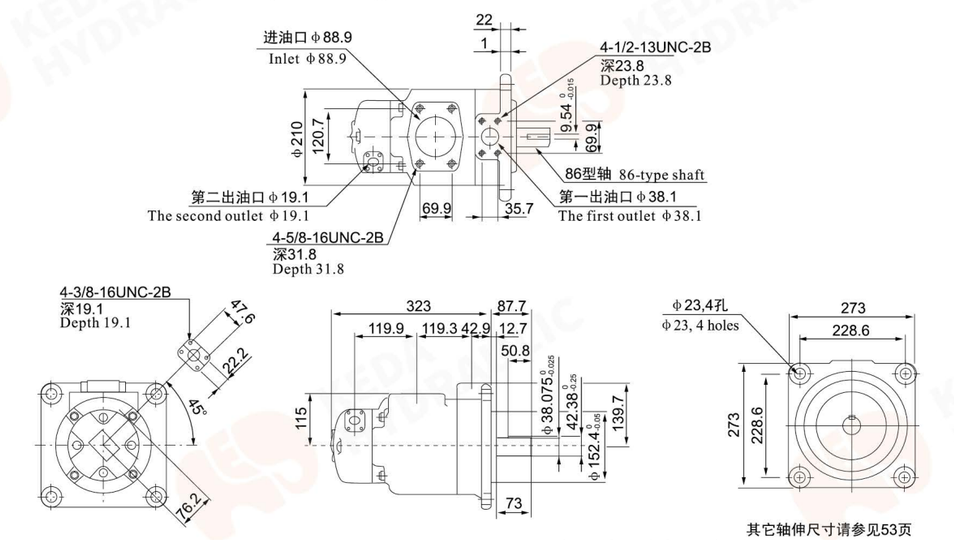

其它轴伸尺寸请参见53页
Please refer to shaft extension sizes in page 53 for rest sizes

安装连接尺寸 Installation sizes

SQP42法兰安装型 SQP42 Flange mounting

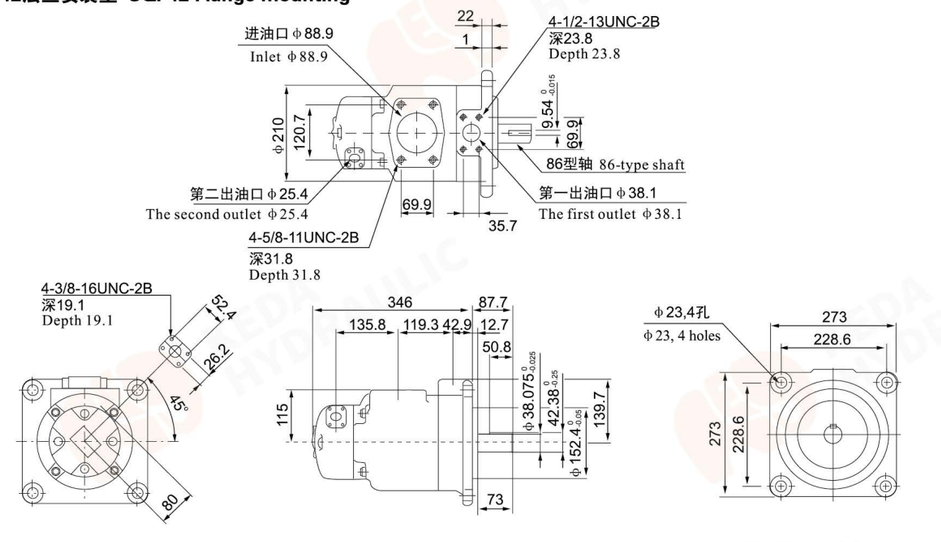

其它轴伸尺寸请参见53页
Please refer to shaft extension sizes in page 53 for rest sizes

SQP43 法兰安装型 SQP43 Flange mounting

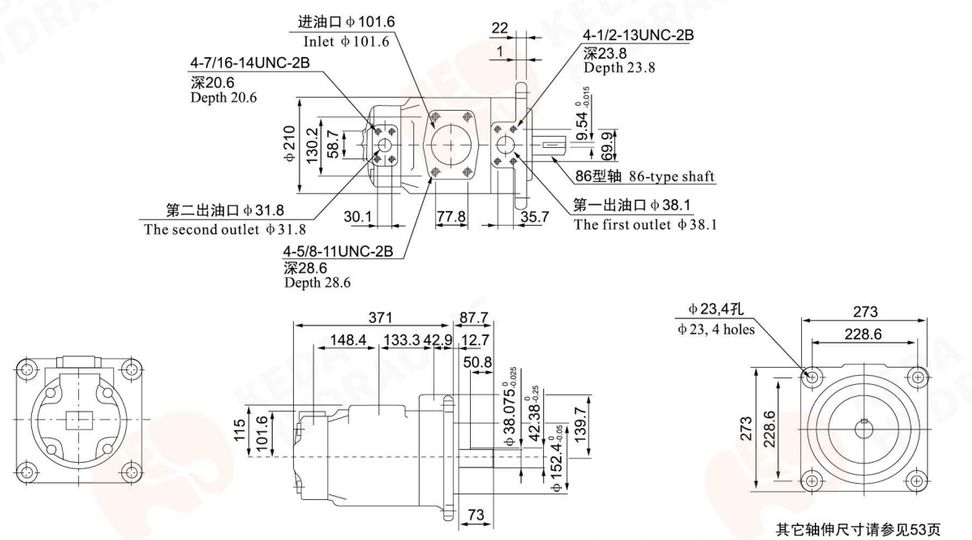

其它轴伸尺寸请参见53页
Please refer to shaft extension sizes in page 53 for rest sizes

V/VQ/SQP系列叶片泵可选轴伸形式 V/VQ/SQP series vane pump shaft extension type

平键直轴
Straight shaft

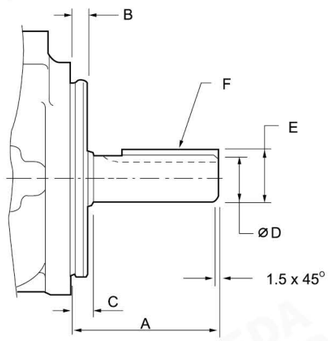

花键轴
Spline shaft

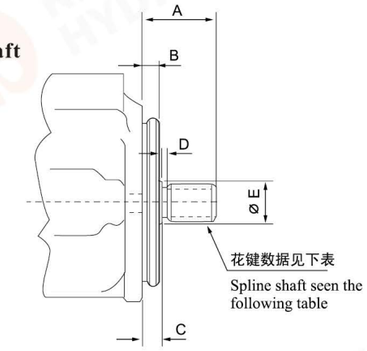

平键直轴 Straight shaft with key

型 号 Models			轴伸代号 Shaft code	A	B	C	D	E	F键宽×长 F key width ×length
V	VQ	SQP							
20V	20VQ	SQP1	1	59	9. 53	12. 1	22. 23/22. 20	24. 5/24. 4	4. 76×32
25V 2520V	25VQ 2520VQ	SQP2 SQP21	1	59	9. 53	11. 1	22. 23/22. 20	24. 5/24. 4	4. 76×32
			86	78	9. 53	11. 1	25. 37/25. 35	28. 3/28. 1	6. 36×50. 8
35V 352*V	35VQ 352*VQ	SQP3 SQP3*	1	73. 2	9. 53	11. 1	31. 75/31. 70	35. 36/34. 10	7. 94×38. 1
			86	86	9. 53	11. 1	34. 90/34. 67	38. 6/38. 3	7. 94×54
45V 45**V	45VQ 45**VQ	SQP4 SQP4*	1	62	12. 7	14. 22	31. 75/31. 70	35. 36/34. 10	7. 94×28. 5
			86	87. 4	12. 7	14. 22	38. 07/38. 05	42. 4/42. 1	9. 54×50. 8

花键轴 Spline shaft

型 号 Models		轴伸代号 Shaft code	A	B	C	D	E	花键数据（见下表） Spline data (see the following table)
V	VQ							
20V	20VQ	151	41.1	9.53	11.1	3.9	27.8	A
25V	25VQ	11	44.5	9.53	11.1	3.9	27.8	A
2520V	2520VQ							
35V	35VQ	11	58.7	9.53	11.1	6.35	35.1	C
352*V	352*VQ							
45V	45VQ	11	61.9	12.7	14.3	9.7	39.6	C
45**V	45**VQ							

花键数据表（渐开线花键）Spline data (Involute spline)

花键数据标记 Spline data tags	齿数 Teeth No	径节 Diametral pitches	大径 Major diameters	成形直径 Forming diameters	小径 Minor diameters	平齿根配合 Match with flat teeth
A	13	16/32	22.17 22.15	19.03	18.63 18.35	大径配合 Match with major diameter
C	14	12/24	31.7 31.67	27.2	26.99 26.64	大径配合 Match with major diameter

PV2R系列高压低噪音叶片泵 PV2R Series high pressure vane pumps with lower noise

产品简介

PV2R系列高压低噪音叶片泵是本公司开发的新型产品，该泵是近年在综合国内外同类产品优点基础上研发的全新国产系列产品，具有结构合理、性能先进、效率高、噪声低、脉动小、可靠性好等特点。该泵规格齐全，安装连接尺寸符合国家标准和国际标准外，还有多个派生系列安装连接尺寸，可满足国内外同类产品替代要求，极大方便用户，广泛应用于机床、塑料机械、锻压机械、工程机械、交通运输机械等领域。

Products introduction

PV2R series high pressure vane pumps with lower noise are the new developed products with the integration of the advantages of similar products at home and aboard in recent years, with the features of rational structure, high performance, high efficiency, lower noise, small pulsation, strong reliability, etc. The pumps provide extreme convenience for users and meet the substitution requirements for similar products with full specifications, national and international standard mounting dimensions, as well as derivative series mounting dimensions, making the pumps widely applied in the fields of machine tool industry, plastic machinery, forging machinery, engineering machinery, transportation machinery, etc.

单泵 Single Pumps

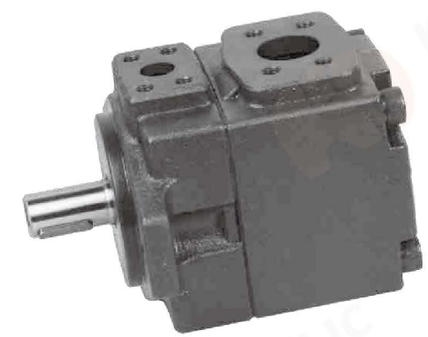

型号说明 Model Descriptions

PV2R1	1	−*	−F	−1	−R	−A	−A
叶片泵产品代号 Vane pumps' codes	子系列号 Model of subsidiary series	公称排量 ml/r Nominal displacement	安装型式 Mounting type	轴伸形式 Shaft extension	旋转方向 Direction of rotation	排出口位置 Outlet position	吸入口位置 Inlet position
PV2R 1		6,8,10,12,14,17, 19,23,25,28,31	F: 法兰安装型 F: Flange mounting	1：大轴标准 1: Major shaft standard 2：小轴 2: Minor shaft	(从轴端看) R:顺时针方向 (右旋标准) (from shaft end) R: Clockwise direction (Right rotation standard) L:逆时针方向 (左旋) L:Counterclockwise direction (Left rotation)	(从轴端看) A:上方(标准) R、B、L (排出口A设定为上方) (from shaft end) A: Upper(Standard) R、B、L (Outlet port A is set as upper.)	(从轴端看) A:上方(标准) B:下方 R:右方 L:左方 (from shaft end) A: Upper(Standard) B: Bottom R: Right L: Left
PV2R 2		26,33,41,47, 53,59,65,75					
PV2R 3		52,60,66,76,85,94 116,125,136,153					

PV2R系列高压低噪音叶片泵 PV2R Series high pressure vane pumps with lower noise

技术参数 Technical parameters

产品型号 Model	理论排量 Theoretical displacement (mL/r)	最高使用压力 Max pressure					允许转速 Allowed driving speed (r /min)		质量 Weight (kg)
		石油系工作油 Working oil of Petroleum series			水基合成液 Water-based synthetic hydraulic fluid				
		高压用特定油 Particular pressure oil	抗磨液压油 Anti-wear oil	普通液压油 Common oil	耐磨性水乙二醇 Anti-wear water -glyco	磷酸脂脂肪酸脂 Sul phosuccinic ester fatty of acid	最高 Max	最低 Mini	
PV2R1-6	6.1	21	17.5	16	16	16	1800 (1200)	750	8
PV2R1-8	8.1								
PV2R1-10	10.2								
PV2R1-12	12.3								
PV2R1-14	14.0								
PV2R1-17	16.3								
PV2R1-19	18.3								
PV2R1-23	22.5								
PV2R1-25	25.1								
PV2R1-28	27.6								
PV2R1-31	30.6								
PV2R2-26	25.4	21	17.5	14	16	14	1800 (1200)	600	16
PV2R2-33	32.2								
PV2R2-41	40.5								
Pv2R2-47	46.2								
PV2R2-53	52.3								
PV2R2-59	58.2								
PV2R2-65	64.1								
PV2R2-75*	74.5								
PV2R3-52	51.5	21	17.5	14	16	14	1800 (1200)	600	32
PV2R3-60	62.9								
PV2R3-66	67.0								
PV2R3-76	79.2								
PV2R3-85	84.5								
PV2R3-94	93.8								
PV2R3-116	113.2	17.5	16				1200		
PV2R3-125	122.8								
PV2R3-136	135.8				14				#34
PV2R3-153	152.8								

注：
1、公称排量“6”、“8”泵，超过16Mpa使用时，转速不低于1450r/min。
2、使用水基、合成液压液时，最高转速限制在1200r / min。
3、对于严格要求低噪声的场合，建议工作转速在1000r / min，最高工作压力在12~14MPa。
4、有*处为PV2R2-W组拓展规格，有#处为PV2R3-W组2个拓展规格，泵体加长10mm，安装尺寸相同，接受特殊订货。
5、驱动功率近似计算：泵的排量（mL/r）X电机转速（r/min）X工作压力（MPa）/49000。计算结果单位为KW。

Notes:
1. The rotation speed shall not be less than 1450r/min for the pumps with the nominal displacement of 6 ml/r or 8 ml/r working under the pressure exceeding 16Mpa.
2. The highest rotation speed shall be limited within 1200r/min, while applying with water-based synthetic hydraulic fluids.
3. It is recommended to work with rotation speed of 1000r/min and maximum pressure of 12-14Mpa on the occasion where lower noise is strictly required.
4. Those pumps with the marks * belong to the extension specification of PV2R2-W group. Those pumps with the marks # belong to the extension specification of PV2R3-W group. These two groups pump casing are 10mm longer than usual specification for special order.
5. The approximate calculation formula for driving power is as follows: the displacement of pump(mL/r) × the rotation speed of motor(r/min) × the working pressure (Mpa) / 49000. The unit for the final calculation result is KW.

PV2R系列高压低噪音叶片泵 PV2R Series high pressure vane pumps with lower noise

外型及安装连接尺寸
Shape and installation dimensions

法兰安装型： PV2R1-＊-F-1-RAA
Flange mounting: PV2R1-＊-F-1-RAA

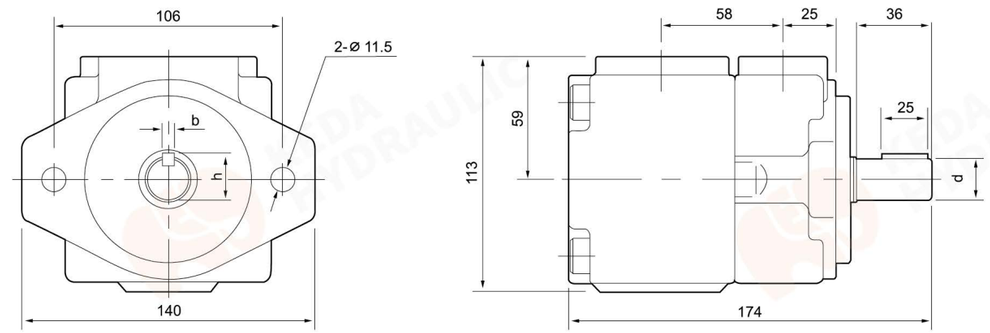

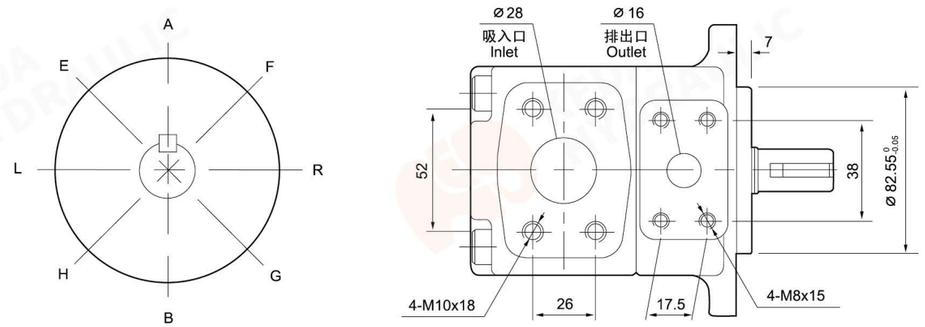

轴伸形式 Shaft extension	d	b	h	备注 Remarks
1	Ø19.05 $^{0}_{-0.03}$	4.75 $^{+0.03}_{0}$	21.24 $^{0}_{-0.16}$	大轴 Major shaft
2	Ø15.88 $^{0}_{-0.03}$	3.97 $^{+0.03}_{0}$	17.68 $^{0}_{-0.16}$	小轴 Minor shaft

PV2R系列高压低噪音叶片泵 PV2R Series high pressure vane pumps with lower noise

外型及安装连接尺寸
Shape and installation dimensions

法兰安装型：PV2R2-＊-F-1-RAA
Flange mounting: PV2R2-＊-F-1-RAA

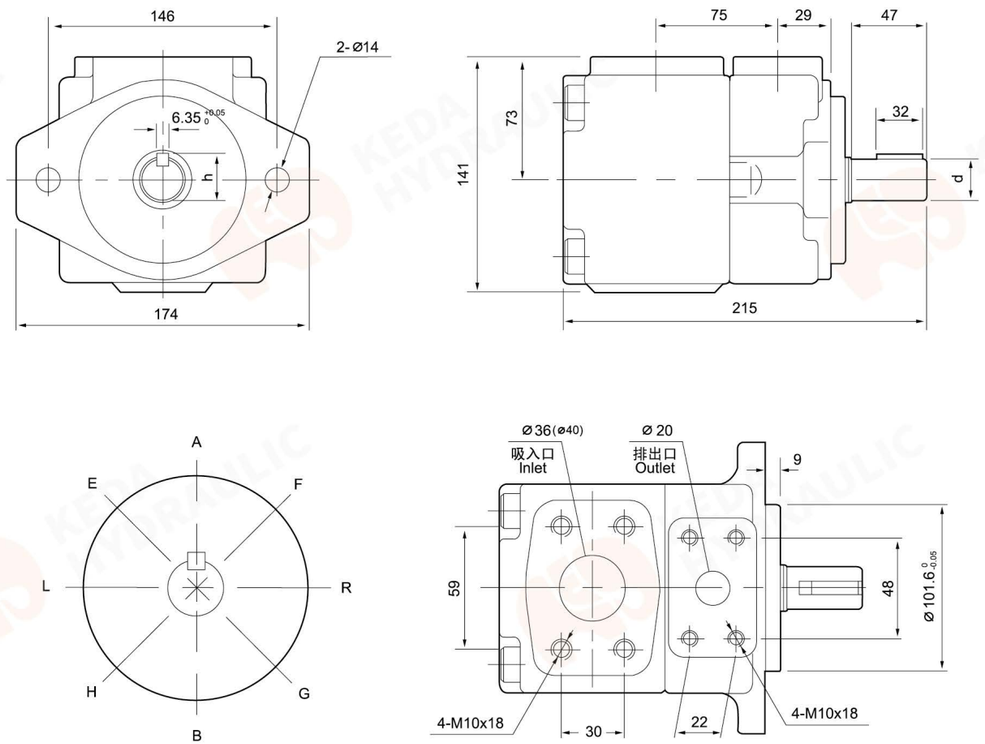

轴伸形式 Shaft extension	d	h	备注 Remarks
1	Ø25.4 0 -0.05	28.18 0 -0.18	大轴 Major shaft
2	Ø22.23 0 -0.03	25.01 0 -0.18	小轴 Minor shaft

PV2R系列高压低噪音叶片泵 PV2R Series high pressure vane pumps with lower noise

外型及安装连接尺寸
Shape and installation dimensions

法兰安装型：PV2R3-＊-F-1-RAA
Flange mounting: PV2R3-＊-F-1-RAA

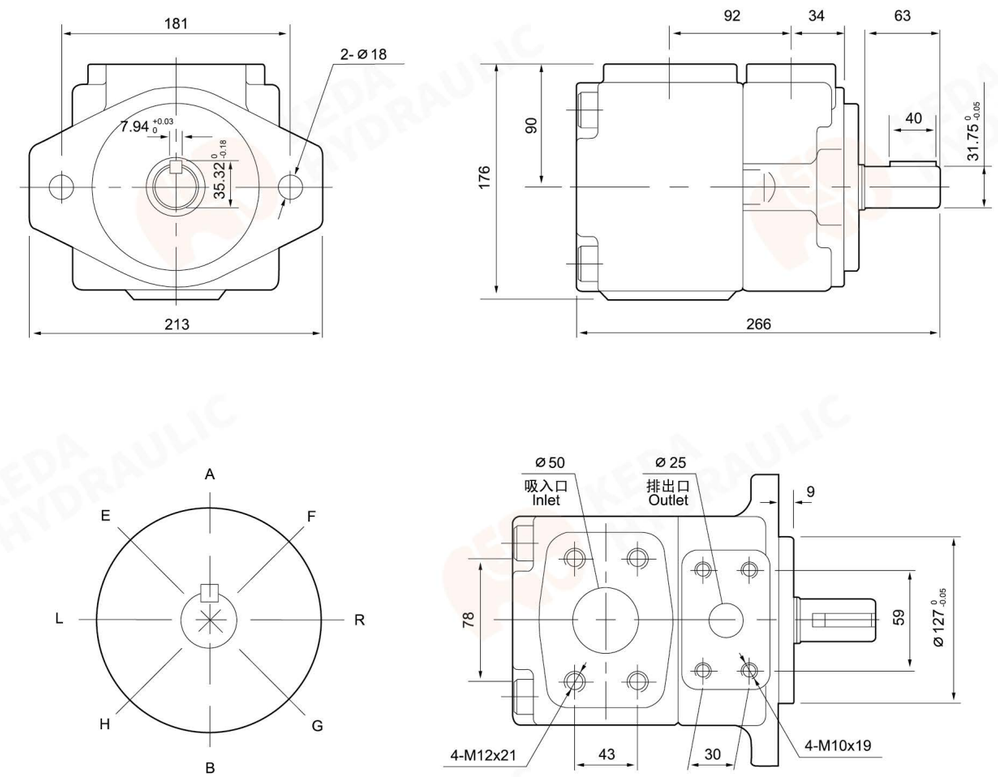

PV2R系列高压低噪音叶片泵 PV2R Series high pressure vane pumps with lower noise

双联叶片泵

本系列泵由同一轴驱动的两个PV2R系列单泵；并联组装在同一壳体内而成，具有一个共用进油口和两个可以输向两个独立回路的出油口；

按照两个泵的系列组合，可获得多种流量。双泵的驱动功率为二单泵功率之和。

Double vane pumps

The double vane pumps are composed with two single PV2R series pumps, which were driving by one shaft and were assembled in parallel in one pump casing with one common inlet port and two outlet ports that connecting to two individual oil circuits.

A variety of flows can be obtained by different combination of the two pumps. The power of double vane pumps is the power sum of two single vane pumps.

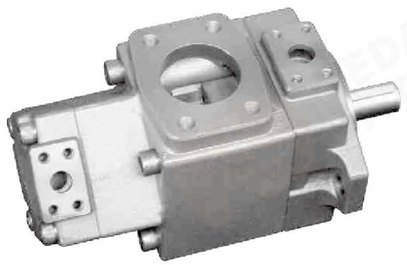

PV2R	13	−*	−*	−F	−1	−R	−A	−A	−A
叶片泵产品代号 Models	子系列号 Code of subsidiaries series	盖端泵公称排量 Cover end pump displacement（mL/ r）	轴端泵公称排量 Shaft end pump displacement（mL/ r）	安装型式 Mounting type	轴伸形式 Shaft extension	旋转方向 Direction of rotation	盖端泵排出口位置 Cover end pump outlet position	轴端泵排出口位置 Shaft end pump outlet position	吸入口位置 Inlet position
PV2R 12		6, 8, 10, 12, 14, 17, 19, 23, 25, 28, 31	26, 33, 41, 47, 53, 59, 65, 75	F: 法兰安装型 F: Flange mounting	1:大轴标准 1: Major shaft standard 2:小轴 2: Minor shaft	(从轴端看) R:顺时针方向(右旋标准) (from shaft end) R:Clockwise direction (Right rotation standard) L:逆时针方向(左旋) L:Counterclockwise Direction (Left rotation)	(从轴端看) E:左上方45°(标准) F:右上方45° G:右下方45° H:左下方45° (from shaft end) E: Upper left 45° (Standard) F: Upper right 45° G: Bottom right 45° H: Bottom left 45°	A:上方(标准) 轴端泵的排出口位置设定为上方 A: Upper (standard) outlet position of shaft end pump shall be set as upper	A:上方(标准) B:下方 R:右方 L:左方 A: Upper (standard) B: Bottom R: Right L: Left
PV2R 13		6, 8, 10, 12, 14, 17, 19, 23, 25, 28, 31	52, 60, 66, 76, 85, 94, 116, 125, 136, 153,				A:上方(标准) B:下方 R:右方 L:左方 A: Upper (standard) B: Bottom R: Right L: Left		
PV2R 23		26, 33, 41, 47, 53, 59, 65, 75	52, 60, 66, 76, 85, 94, 116, 125, 136, 153,				E:左上方45°(标准) F:右上方45° G:右下方45° H:左下方45° (from shaft end) E: Upper left 45° (Standard) F: Upper right 45° G: Bottom right 45° H: Bottom left 45°		

PV2R系列高压低噪音叶片泵 PV2R Series high pressure vane pumps with lower noise

技术参数 Technical parameters

产品型号 Model	油泵出口 Outlet	公称排量 Nominal displacement (ml/r)	最高使用压力 Max pressure					允许转速 Allowed driving speed (r /min)		质量 Weight (kg)
			石油系工作油 Working oil of Petroleum series			水基合成液 Water-based synthetic hydraulic fluid				
			高压用特定油 Particular pressure oil	抗磨液压油 Anti-wear oil	普通液压油 Common oil	耐磨性水乙二醇 Anti-wear water -glyco	磷酸脂脂肪酸脂 Sul phosuccinic ester fatty of acid	最高 Max	最低 Mini	
PV2R12	盖端泵 Cove end pump PV2R1	-6	21	17.5	14	16	14	1800	600	22.5
		-8								
		-10								
		-12								
		-14								
		-17								
		-19								
		-23								
		-25						(1200)		
		-28								
		-31								
	轴端泵 Bearing pump PV2R2	-26			16		16		750	
		-33								
		-41								
		-47								
		-53								
		-59								
		-65								

注：

1、使用水基、合成液压液时，最高转速限制在1200r / min。

2、对于严格要求低噪声的场合，建议工作转速在1000r / min，最高工作压力在12-14MPa。

Notes:

1. The highest rotation speed shall be limited within 1200r/min, while adopting water-based synthetic hydraulic fluids.
2. It is recommended to work with rotation speed of 1000r/min and maximum pressure of 12-14Mpa on the occasion where lower noise is strictly required.

PV2R系列高压低噪音叶片泵 PV2R Series high pressure vane pumps with lower noise

技术参数 Technical parameters

产品型号 Model	油泵出口 Outlet	公称排量 Nominal displacement (ml/r)	最高使用压力 Max pressure					允许转速 Allowed driving speed (r /min)		质量 Weight (kg)
			石油系工作油 Working oil of Petroleum series			水基合成液 Water-based synthetic hydraulic fluid				
			高压用特定油 Particular pressure oil	抗磨液压油 Anti-wear oil	普通液压油 Common oil	耐磨性水乙二醇 Anti-wear water -glyco	磷酸脂脂肪酸脂 Sul phosuccinic ester fatty of acid	最高 Max	最低 Mini	
PV2R13	盖端泵 Cove end pump PV2R1	-6	21	17.5	16	16	16	1800	750	37.5
		-8								
		-10								
		-12								
		-14								
		-17								
		-19								
		-23								
		-25								
		-28								
		-31						(1200)		
	轴端泵 Bearing pump PV2R3	-52			14		14		600	
		-60								
		-66								
		-76								
		-85								
		-94								
		-116								
		-125								
		-136	17.5	16		14		1200		
		-153								

注：
1、使用水基、合成液压液时，最高转速限制在1200r / min。
2、对于严格要求低噪声的场合，建议工作转速在1000r / min，最高工作压力在12-14MPa。
Notes:
1. The highest rotation speed shall be limited within 1200r/min, while adopting water-based synthetic hydraulic fluids.
2. It is recommended to work with rotation speed of 1000r/min and maximum pressure of 12-14Mpa on the occasion where lower noise is strictly required.

PV2R系列高压低噪音叶片泵 PV2R Series high pressure vane pumps with lower noise

技术参数 Technical parameters

产品型号 Model	油泵出口 Outlet	公称排量 Nominal displacement (ml/r)	最高使用压力 Max pressure					允许转速 Allowed driving speed (r /min)		质量 Weight (kg)
			石油系工作油 Working oil of Petroleum series			水基合成液 Water-based synthetic hydraulic fluid				
			高压用特定油 Particular pressure oil	抗磨液压油 Anti-wear oil	普通液压油 Common oil	耐磨性水乙二醇 Anti-wear water -glyco	磷酸脂脂肪酸脂 Sul phosuccinic ester fatty of acid	最高 Max	最低 Mini	
PV2R23	盖端泵 Cove end pump PV2R2	-26	21	17.5	14	16	14	1800	600	45
		-33								
		-41								
		-47								
		-53								
		-59								
		-65								
	轴端泵 Bearing pump PV2R3	-52						(1200)		
		-60								
		-66								
		-76								
		-85								
		-94								
		-116	17.5	16		14		1200		
		-125								
		136								
		153								

注：
1、使用水基、合成液压液时，最高转速限制在1200r / min。
2、对于严格要求低噪声的场合，建议工作转速在1000r / min，最高工作压力在12-14MPa。
Notes:
1. The highest rotation speed shall be limited within 1200r/min, while adopting water-based synthetic hydraulic fluids.
2. It is recommended to work with rotation speed of 1000r/min and maximum pressure of 12-14Mpa on the occasion where lower noise is strictly required.

PV2R系列高压低噪音叶片泵 PV2R Series high pressure vane pumps with lower noise

外型及安装连接尺寸
Shape and installation dimensions

法兰安装型：PV2R12-*/*-F-1-REAA
Flange mounting: PV2R12-*/*-F-1-REAA

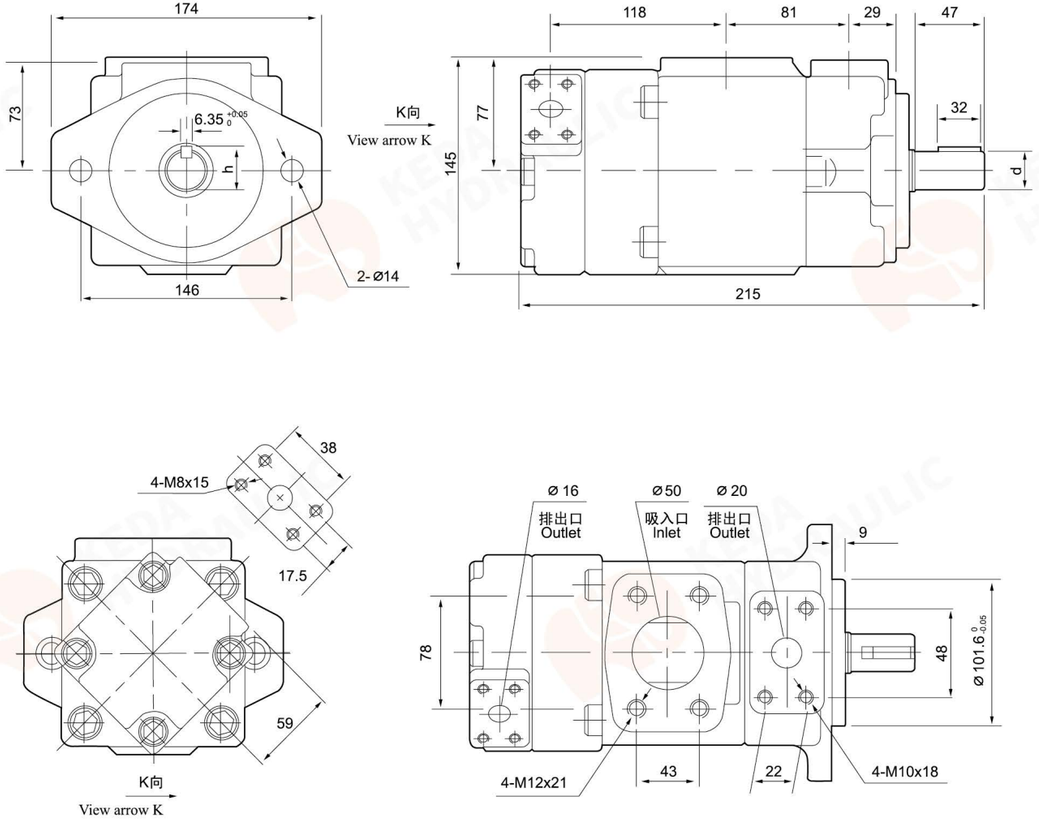

轴伸形式 Shaft extension	d	h	备注 Remarks
1	Ø25.4 $^{0}_{-0.05}$	28.18 $^{0}_{-0.18}$	大轴 Major shaft
2	Ø22.23 $^{0}_{-0.03}$	25.01 $^{0}_{-0.18}$	小轴 Minor shaft

PV2R系列高压低噪音叶片泵 PV2R Series high pressure vane pumps with lower noise

外型及安装连接尺寸
Shape and installation dimensions

法兰安装型：PV2R13-*/*-F-1-RAAA
Flange mounting: PV2R13-*/*-F-1-RAAA

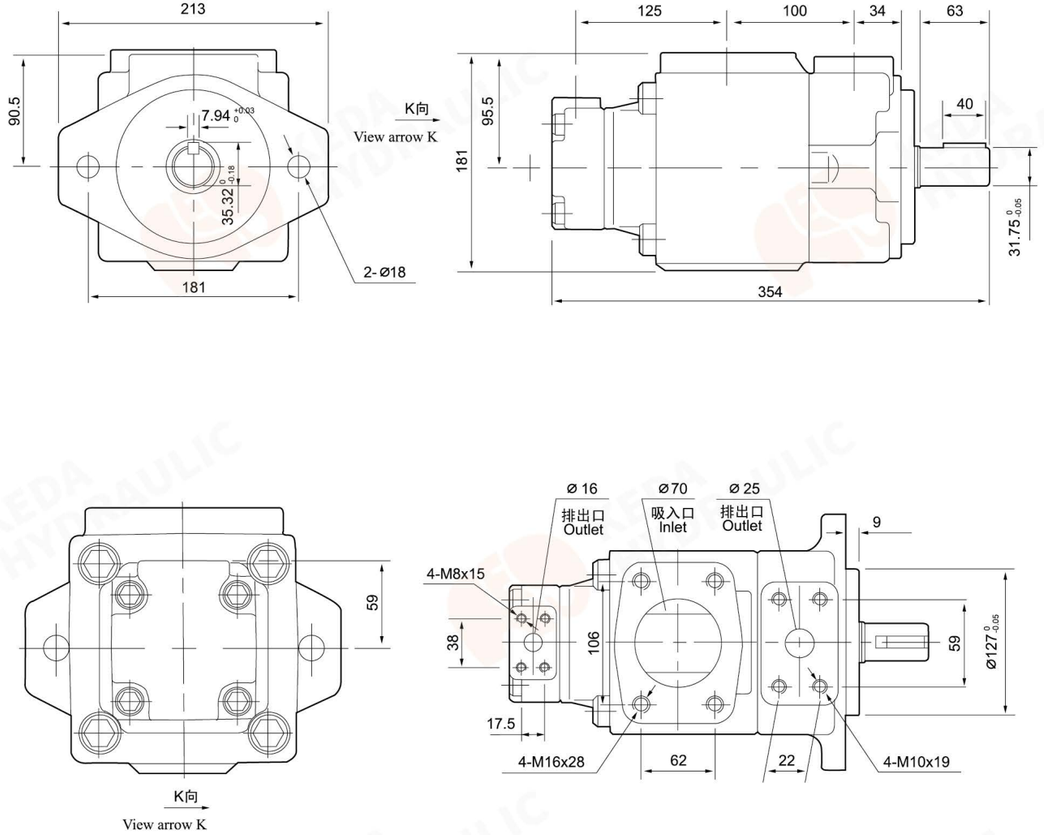

PV2R系列高压低噪音叶片泵 PV2R Series high pressure vane pumps with lower noise

外型及安装连接尺寸
Shape and installation dimensions

法兰安装型： PV2R23-*/*-F-1-REAA
Flange mounting: PV2R23-*/*-F-1-REAA

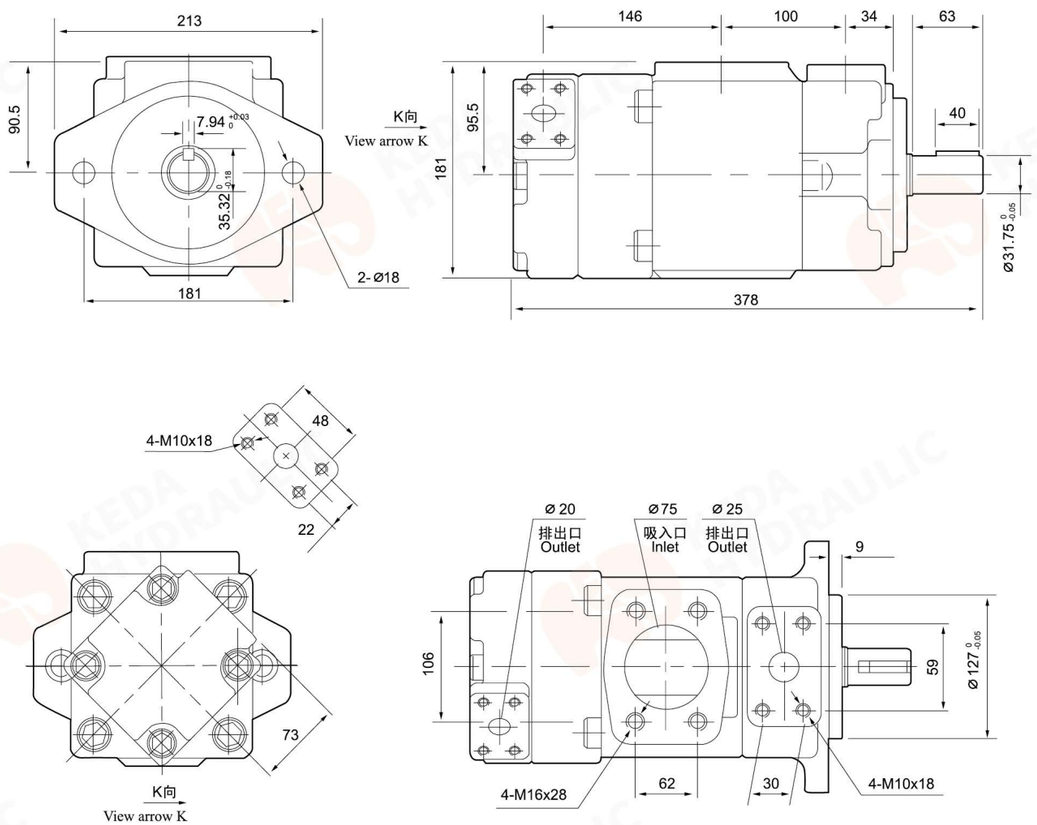

法兰连接组件 Flange components

安装连接尺寸 Installation sizes

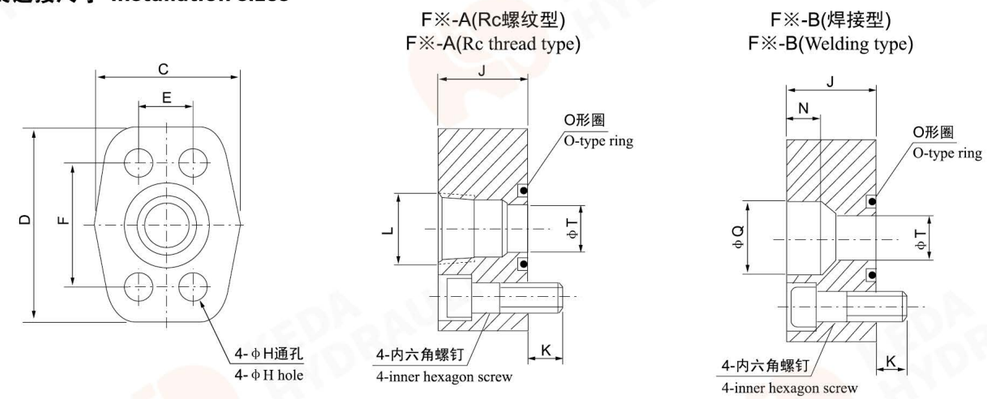

法兰型号 Flange models	对应管子规格 Corresponding pipes' specifications	尺寸 mm Sizes mm C	D	E	F	H	J	K	L	N	Q	T	O型圈 O-type ring GB34521-82	内六角螺钉 inner hexagon screw	螺钉拧紧力矩 Tightening torque of screw N-m	对应油泵接口 Corresponding pumps connector
F04 A	1/2"	43	59.0	17.5	38.1	9.0	28.0	11	1/2"	——	——	13	21.2x2.65	M8x30	35	PV 2R1出口 PV 2R12、PV 2R13盖端泵出口 PV2R1 port PV. 2R12. PV2R13 cover end pump port
F04-B									——	11	22.5					
F06-A	3/4"	53.2	71.6	22.2	47.6	11.2	30.0	11	3/4"	——	——	19	30x3.55	M10x30	68.5	PV 2R2、PV 2R12轴端泵出口 PV 2R23盖端泵出口 PV2R2. PV2R12 shaft end pump port PV2R23 cover end pump port
F06-B									——	12	28.5					
F08-A	1"	58.0	76.4	26.2	52.4	11.2	30.0	16	1"	——	——	26	34.5x3.55	M10x35	68.5	PV 2R1吸入口 PV2R1 inlet
F08-B									——	14	34.5					
F10-A	1-1/4"	57.7	84.7	30.2	58.7	12.0	40.0	16	1-1/4"	——	——	32	40x3.55	M10x45	68.5	PV 2R2吸入口 PV 2R3出口、PV 2R13 PV 2R23轴端泵出口 PV2R2 inlet PV2R3 port, PV2R13, PV2R23 shaft end pump port
F10-B									——	16	43.0					
F12-A	1-1/2"	70.0	96.0	35.7	69.9	13.8	40.0	18	1-1/2"	——	——	38	50x3.55	——	118	——
F12-B									——	18	49.1					
F16-A	2"	87.0	105.0	42.9	77.8	13.8	40.0	18	2"	——	——	51	65x3.55	M12x45	118	PV 2R3、PV 2R12吸入口 PV2R3. PV2R12 inlet
F16-B									——	20	61.0					
F20-A	2-1/2"	96.0	116.0	50.8	88.9	13.8	45.0	18	2-1/2"	——	——	63	75x3.55	——	118	——
F20-B									——	22	77.1					
F24-A	3"	121.0	141.4	61.9	106.4	17.0	45.0	17	3"	——	——	76	85x3.55	M16x45	287	PV 2R13、PV 2R23吸入口 PV2R13. PV2R23 inlet
F24-B									——	25	90.0					
F28-A	3-1/2"	136.0	155.0	69.9	120.7	17.0	50.0	17	3-1/2"	——	——	89	100x3.5	M16x40	287	——
F28-B									——	28	102.8			M16x50		
F32-A	4"	145.0	162.0	77.8	130.2	17.0	50.0	17	4"	——	——	102	115x3.5	M16x40	287	——
F32-B									——	28	115.5			M16x50		

PVH系列泵芯组件 PVH Series Cartridge Kite

型号说明 Model Descriptions

PC-	PVH	-23	-R
泵芯标记 Cartridge kit mark	系列号 Models	公称排量 ml/r Nominal displacement	油泵旋向 Rotation
PC:单泵泵芯 双联泵轴端泵芯 PCT:双联泵盖端泵芯 PC-Single pump cartridge kits Double pump shaft end pump cartridge kits PCT-Double pump cover end pump cartridge kits	PVH1	6, 8, 10, 12, 14, 17, 19, 23, 25, 28, 31	(从轴端看) R-顺时针向 L-逆时针向 (Viewed from shaft end) R-Right hand for clockwise L-Left hand for counter clockwise
	PVH2	26, 33, 41, 47, 53, 59, 65, 75	
	PVH3	52, 60, 66, 76, 85, 94, 116, 125, 136, 153	

安装连接尺寸 Installation sizes

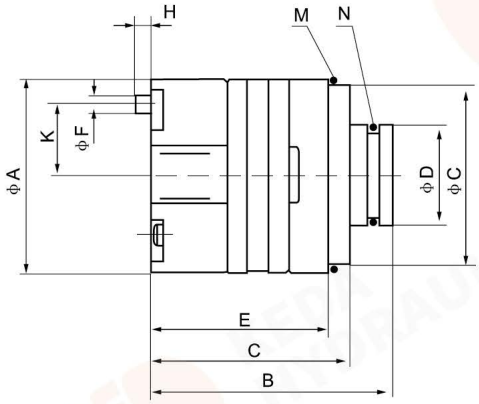

系列号 Models	A	B	C	D	E	F	G	H	K	M	N
PVH1	68	84	70	35	62	6	62.7	5	R25	49.4×3.1	29.4×3.1
PVH2	90	109	93	52	82	6	84.7	5	R36	84.4×3.1	45.7×3.5
PVH3	120.5	127.5	106	72	94	8	115	8	R48	114.4×3.1	65.0×3.5

系列号 Models	转子内花键齿廓参数 Spline teeth No. in rotor					
	模数 Modulus	齿数 No. of teeth	标准压力角 Standard angle	大径 Major diameter	小径 Minor diameter	(节径圆)弧齿槽宽 Space width
PVH1	0.75	24	45°	19.050	17.550	1.328
PVH2	1.0	24	45°	25.400	23.400	1.771
PVH3	1.0	28	45°	29.400	27.400	1.771